5-4940-200-25 P

TM 5-4940-200-25P

DEPARTMENT OF THE ARMY TECHNICAL MANUAL

ORGANIZATIONAL, DIRECT AND GENERAL SUPPORT,
AND DEPOT MAINTENANCE REPAIR PARTS
AND SPECIAL TOOLS LIST

SHOP EQUIPMENT, CONTACT MAINTENANCE,
TRUCK MOUNTED, SET NO. 3
(SOUTHWEST MODEL SECM) AND (DAVEY MODEL
CMU-5) FSN 4940-294-9518

HEADQUARTERS, DEPARTMENT OF THE ARMY
DECEMBER 1968

D 101.11:

pages tightly bound

best copy available

TECHNICAL MANUAL
No. 5-4940-200-25P

HEADQUARTERS
DEPARTMENT OF THE ARMY
WASHINGTON, D. C., *11 December 1968*

ORGANIZATIONAL, DIRECT AND GENERAL SUPPORT,
AND DEPOT MAINTENANCE REPAIR PARTS
AND SPECIAL TOOLS LIST

SHOP EQUIPMENT, CONTACT MAINTENANCE, TRUCK MOUNTED, SET NO. 3 (SOUTHWEST MODEL SECM) AND (DAVEY MODEL CMU-5) FSN 4940-294-9518

Current as of 21 November 1968

		Paragraph	Page
SECTION I.	INTRODUCTION		
	Scope	1	v
	General	2	v
	Explanation of columns	3	v
	Special information	4	vii
	How to locate repair parts	5	vii
	Abbreviations	6	viii
	Federal supply codes for manufacturers	7	viii
	Report of equipment publication improvements	8	ix
II.	PRESCRIBED LOAD ALLOWANCE		xi
III.	REPAIR PARTS FOR ORGANIZATIONAL MAINTENANCE		
Group 03.	Fuel System		
	0306 Tanks, lines and fittings		1
	0308 Engine speed governor		1
	0312 Accelerator, throttle or choke control		3
06.	Electrical System		
	0606 Engine safety controls		5
	0608 Miscellaneous items		9
	0611 Horn		10
08.	Power Transfer		
	0802 Clutch and clutch controls		11
	0803 Gear shift controls		11
09.	Propeller Shaft		
	0900 Propeller shafts		15
18.	Body, Cab, Hood and Hull		
	1812 Special purpose bodies		15
20.	Power Take-Off		
	2004 Power take-off assembly		84
22.	Body, Chassis or Hull and Accessory Items		
	2202 Accessory items		87
	2210 Data plates		87
42.	Electrical Equipment		
	4216 Miscellaneous wiring and fittings		89

*This manual supersedes TM 5-4940-200-20P, 4 February 1964 and TM 5-4940-200-35P, 24 February 1964.

			Pa
Group	44.	Welding Equipment	
		4400 Arc welders	40
		4403 Brush holder assembly	40
		4405 Frame support, housing and carrier	41
		4406 Ventilation, cooling system	41
		4407 Control panels, housing and cubicles	42
		4408 Connecting devices	43
		4409 Protective devices, electrical	44
		4410 Switching, timing and speed controls	44
		4411 Resistors components	45
		4414 Radio interference suppression	46
	95.	General Use Standardized Parts	
		9501 Bulk material	49
SECTION	IV.	SPECIAL TOOLS, TEST AND SUPPORT EQUIPMENT FOR ORGANIZATIONAL MAINTENANCE (NOT APPLICABLE)	
	V.	REPAIR PARTS FOR DS, GS, AND DEPOT MAINTENANCE	
Group	03.	Fuel System	
		0305 Tanks, lines and fittings	50
		0308 Engine speed governor	50
		0312 Accelerator, throttle or choke control	56
	06.	Electrical System	
		0606 Engine safety controls	58
		0608 Miscellaneous items	65
		0609 Lights	66
		0611 Horn	66
	08.	Power Transfer	
		0802 Clutch and clutch controls	69
		0803 Gear shift controls	70
	09.	Propeller shaft	
		0900 Propeller shafts	74
	1?.	Frame	
		1501 Frame assembly	77
	18.	Body, Cab, Hood and Hull	
		1812 Special purpose bodies	78
	20.	Power Take-Off	
		2004 Power Take-off assembly	109
	22.	Body, Chassis or Hull and Accessory Items	
		2202 Accessory items	119
		2210 Data plates	119
	42.	Electrical Equipment	
		4216 Miscellaneous wiring and fittings	121
	44.	Welding Equipment	
		4400 Arc welders	122
		4401 Rotor assembly	124
		4402 Stator assembly	127
		4403 Brush holder assembly	128
		4404 Drive components	131
		4405 Frame support, housing and carrier	132
		4406 Ventilating, cooling system	135
		4407 Control panels, housing and cubicles	136
		4408 Connecting devices	149
		4409 Protective devices, electrical	155
		4410 Switching, timing and speed control	155
		4411 Resistor components	168
		4414 Radio interference suppression	178

Page

Group 47. Gages, Weighing and Measuring Devices
4703 Hourmeter ---- 176
95. General Use Standardized Parts
9501 Bulk material ---- 176
SECTION VI. SPECIAL TOOLS, TEST AND SUPPORT EQUIPMENT FOR DS, GS, AND DEPOT MAINTENANCE (NOT APPLICABLE)
VII. FEDERAL STOCK NUMBER AND REFERENCE NUMBER INDEX ---- 234

SECTION I

INTRODUCTION

1. Scope

This manual lists repair parts and special tools required for the performance of organizational, direct support, general support, and depot maintenance of the shop equipment.

2. General

a. The repair parts list is arranged as follows:

(1) Individual parts and major assemblies are listed alphabetically by item name within the numbered functional groups.

(2) Assembly components and subassemblies are indented and listed alphabetically by item name under major assemblies.

b. This Repair Parts and Special Tools List is divided into the following sections:

(1) *Prescribed Load Allowance (PLA)—Section II.* A consolidated listing of repair parts quantitatively allocated for initial stockage at the organizational level. *This is a mandatory minimum stockage allowance.*

(2) *Repair Parts—Section III.* A list of repair parts authorized for the performance of maintenance at the organizational level.

(3) *Special Tools, Test and Support Equipment—Section IV.* Not Applicable.

(4) *Repair Parts—Section V.* A list of repair parts authorized for the performance of maintenance at the direct support, general support, and depot level.

(5) *Special Tools, Test and Support Equipment—Section VI.* Not Applicable.

(6) *Federal Stock Number and Reference Number Index—Section VII.* A list of Federal stock numbers followed by reference numbers, appearing in all the listings, in ascending alphanumeric sequence cross-referenced to index number.

3. Explanation of Columns

The following provides an explanation of columns in the tabular lists in sections II through VI.

a. *Source, Maintenance, and Recoverability Codes (SMR).*

Note. Common hardware items known to be readily available in Army supply channels will be assigned Maintenance codes only. Source codes, Recoverability codes, and Maintenance Allowances will not be assigned to this category.

(1) *Source Code.* Indicates the selection status and source for the listed item. Source codes used are:

Code	Explanation
P	Applied to repair parts which are stocked in or supplied from DSA/GSA or Army supply system, and authorized for use at indicated categories.
M	Applied to repair parts which are not procured or stocked but are to be manufactured at indicated maintenance categories.
A	Applied to assemblies which are not procured or stocked as such but made up of two or more units, each of which carry individual stock numbers and descriptions and are procured and stocked and can be assembled by units at indicated maintenance categories.
X	Applied to parts and assemblies which are not procured or stocked, the mortality of which is normally below that of the applicable end item, and the failure of which should result in retirement of the end item from the supply system.
X1	Applied to repair parts which are not procured or stocked, the requirement for which will be supplied by use of the next higher assembly or components.
X2	Applied to repair parts which are not stocked. The indicated maintenance category requiring such repair parts will attempt to obtain them through cannibaliza-

Code	Explanation
	tion; if not obtainable through cannibalization, such repair parts will be requisitioned with supporting justification through normal supply channels.
C	Applied to repair parts authorized for local procurements. If not obtainable from local procurement, such repair parts will be requisitioned through normal supply channels with a supporting statement of nonavailability from local procurement.
G	Applied to major assemblies that are procured with PEMA (Procurement Equipment Missile Army) funds for initial issue only to be used as exchange assemblies at DSU and GSU maintenance level. These assemblies will not be stocked above DSU and GSU level or returned to depot supply level.

(2) *Maintenance Code.* Indicates the lowest category of maintenance authorized to install the listed item. The maintenance level codes are:

Code	Explanation
O	Organizational maintenance
F	Direct support maintenance
H	General support maintenance
D	Depot maintenance

(3) *Recoverability Code.* Indicates whether unserviceable items should be returned for recovery or salvage. Items not coded are expendable. Recoverability codes are:

Code	Explanation
R	Applied to repair parts and assemblies which are economically repairable at DSU and GSU activities and normally are furnished by supply on an exchange basis.
T	Applied to high dollar value recoverable repair parts which are subject to special handling and are issued on an exchange basis. Such repair parts normally are repaired or overhauled at depot maintenance activities.
U	Applied to repair parts specifically selected for salvage by reclamation units because of precious metal content, critical materials, high dollar value reusable casings or castings.

(4) This column also lists, below the SMR code, an index number for each item in ascending numerical sequence, which is used to locate items in the publication when the Federal stock number and/or reference number is known.

b. Federal Stock Number. Indicates the Federal stock number for the item.

c. Description. Indicates the Federal item name and any additional description of the item required. The applicable five-digit Federal Supply Code for manufacturers, in parentheses, is followed by a part number or other reference number.

d. Unit of Issue. Indicates the unit used as a basis for issue, e.g., ea, pr, ft, yd, etc.

e. Quantity Incorporated in Unit Pack. Indicates the actual quantity contained in the unit pack.

f. Quantity Incorporated in Unit. Indicates the quantity of the item used in the functional group.

g. Fifteen-Day Organizational Maintenance Allowances.

(1) The allowance columns are divided into four subcolumns. Indicated in each subcolumn opposite the first appearance of each item is the total quantity of items authorized for the number of equipments supported. Subsequent appearances of the same item will have no entry in the allowance columns but will have in the description column a reference to the first appearance of the item. Items authorized for use as required but not for initial stockage are identified with an asterisk in the allowance column.

(2) The quantitative allowances for organizational level of maintenance represents one initial prescribed load for a 15-day period for the number of equipments supported. Units and organizations authorized additional prescribed loads will multiply the number of prescribed loads authorized by the quantity of repair parts reflected in the appropriate density column to obtain the total quantity of repair parts authorized.

(3) Organizational units providing maintenance for more than 100 of these equipments shall determine the total quantity of parts required by converting the equipment quantity to a decimal factor by placing a decimal point before the next to last digit of the number to indicate hundredths, and multiplying the decimal factor by the parts quantity authorized in the 51–100 allowance column. Example, authorized allowance for 51–100 equipments is 12; for 140 equipments multiply 12 by 1.40 or 16.80 rounded off to 17 parts required.

(4) Subsequent changes to allowances will be limited as follows: No change in the range of items is authorized. If additional items are considered necessary, recommendation should be forwarded to U.S. Army Mobility Equipment Command for exception or revision to the allowance list. Revisions to the range of items authorized will be made by this Command based upon engineering experience, demand data, or TAERS information.

h. Thirty-Day DS/GS Maintenance Allowances.

(1) The allowance columns are divided into three subcolumns. Indicated in each subcolumn, opposite the first appearance of each item, is the total quantity of items authorized for the number of equipments supported. Subsequent appearances of the same item will have no entry in the allowance column, but will have in the description column a reference to the first appearance of the item. Items authorized for use as required but not for initial stockage are identified with an asterisk in the allowance column.

(2) The quantitative allowances for DS/GS levels of maintenance will represent initial stockage for a 30-day period for the number of equipments supported.

(3) Determination of the total quantity of parts required for maintenance of more than 100 of these equipments can be accomplished by converting the equipment quantity to a decimal factor by placing a decimal point before the next to last digit of the number to indicate hundredths, and multiplying the decimal factor by the parts quantity authorized in the 51—100 allowance column. Example, authorized allowance for 51—100 equipments is 40; for 150 equipments multiply 40 by 1.50 or 60 parts required.

i. One-Year Allowances Per 100 Equipments/Contingency Planning Purposes. Indicates opposite the first appearance of each item the total quantity required for distribution and contingency planning purposes. The range of items indicates total quantities of all authorized items required to provide for adequate support of 100 equipments for one year.

j. Depot Maintenance Allowance Per 100 Equipments. Indicates opposite the first appearance of each item the total quantity authorized for depot maintenance of 100 equipments. Subsequent appearances of the same item will have no entry in this column, but will have in the description column a reference to the first appearance of the item. Items authorized for use but not for initial stockage are identified with an asterisk in the allowance column.

k. Illustration.

(1) *Figure Number.* Indicates the figure number of the illustration in which the item is shown.

(2) *Item Number.* Indicates the callout number used to reference the item in the illustration.

4. Special Information

a. Identification of the usable on codes of this publication are:

Code	Used on
A	Southwest Model SECM, only
B	Davey Model CMU-5, only

\Uncoded items used on all models

b. Repair parts mortality has been based on 2000 hours of operation per year.

c. Parts which require manufacture or assembly at a category higher than that authorized for installation will indicate in the source column the higher category.

d. The following publications pertain to shop equipment and its components:

TM 5-4940-200-12	Operator and Organizational Maintenance Manual
TM 5-4940-200-35	Direct and General Support Maintenance Manual
LO 5-4940-200-12	Lubrication Order

5. How to Locate Repair Parts

a. When Federal Stock Numbers or reference number is unknown:

(1) *First.* Using the table of contents, determine the functional group or subgroup

within which the repair part belongs. This will refer to a page in the parts listing.

(2) *Second.* The illustration column of the page refers to a figure number.

(3) *Third.* Locate the figure and identify the repair parts, noting the item number.

(4) *Fourth.* Refer back to the page of the parts listing. Find the item number in the illustration column that corresponds with the figure number.

b. When Federal stock number or reference number is known:

(1) *First.* Using the index of Federal stock numbers and reference numbers, find the pertinent federal stock number or reference number. This index is in ascending alphanumeric sequence cross-referenced to an index number.

(2) *Second.* Using the Repair Part Listing, find the index number referenced in the index of Federal stock numbers and reference numbers.

6. Abbreviations

ac	alternating current
amp	ampere (s)
assy	assembly
AWG	American Wire Gage
dc	direct current
deg	degree (s)
dia	diameter (s)
ft	foot (feet)
grp	group
id	inside diameter
in.	inch (s)
kw	kilowatt
lg	long (length)
lh	left hand
mtg	mounting
No.	number
od	outside diameter
ohm	ohmmeter
rh	right hand
thd	thread (s)
thk	thick (ness)
v	volt (s)
w	watt, wide, width

7. Federal Supply Codes for Manufacturers

Code	Manufacturer
00000	Ordnance Corp.
02505	JBT Electrical Instrument Co.
03743	Appleton Electric Co.
04009	Arrow-Hart and Hegeman Electric Co.
06004	Bassick Co., The
08315	Highway Products, Inc.
16004	Davey Compressor Co.
19207	Army Tank-Automotive Center
24161	Gates Rubber Co.
24447	General Electric Co.
24617	General Motors Corp.
28835	Hobart Brothers Co., The
32242	Johnson Service Co.
38443	Marlin-Rockwell Corp.
43334	New Departure Div. of G.M.C.
44655	Ohmite Mfg. Co.
57448	Stephens-Adamson Mfg. Co.
57711	Stewart FW Corp.
57733	Stewart-Warner Corp.
58923	Roper Hydraulics Inc.
59730	Thomas and Betts Co.
61208	Twin Disc Cluten Co.
63477	Wagner Electric Co.
65909	Kaiser Jeep Corp.
70270	Alemite Corp.
70903	Belden Mfg. Co.
71002	Birnbach Co., Inc.
71183	Bryant Electric Co.
72968	Hager C. and Sons Hinge Mfg. Co.
74063	Hartman Electrical Mfg. Co.
74545	Hubbel Harvey, Inc.
74865	Crysler Corp.
74928	Industrial Rubber Goods Div. of Ball Bros., The
75376	Kurs-Kasch, Inc.
75582	Leviton Mfg. Co.
75915	Littlefuse Inc.
76241	Maurey Mfg. Corp.
76545	Mueller Electric Co.
76654	National Gasket Mfg. Co.
77060	Packard Electric Div. of G.M.C.
77111	Paranite Wire and Cable Div. of Essex Wire Corp.
77260	Pierce Governor Co., Inc.
77342	American Machine and Foundry Co. Potter and Brumfield Div.
78553	Tinnerman Products, Inc.
78992	Universal Products Div. of Crysler Corp.
79061	Vaco Products Co.
79550	Whitaker Cable Corp.
80058	Joint Electronic Type Designation System
80482	Acro Welding and Mfg. Co.
81074	Holub Industries, Inc.
81257	Douglas Mfg. Div. of Kingston Products Corp.
81300	Dayco Corp.
81603	Raco Products Co.
85923	Electro Engineering Products Co.
85925	Electro Mechanical Instrument Co.

Code	Manufacturer
88044	Aeronautical Standards Group Dept. of Navy and Air Force
89858	Crysler Corp.
92866	Minnesota Automotive, Inc.
94222	South Chester Corp.
96906	Military Standards
97084	Gibson Good Tools, Inc.
97403	Army Engineer Research and Development Laboratories
98255	Southwest Truck Body Co., The

8. Report of Equipment Improvement Publications

Report of errors, omissions, and recommendations for improving this manual by the individual user is encouraged. Reports should be submitted on a DA Form 2028 (Recommended Changes to DA Publications) and forwarded direct to Commanding General, U.S. Army Mobility Equipment Command, ATTN: AMSME-MPP, 4300 Goodfellow Boulevard, St. Louis, Mo. 63120.

(1) SMR CODE / INDEX NO.	(2) FEDERAL STOCK NUMBER	(3) DESCRIPTION REFERENCE NO. & MFR. CODE — USABLE ON CODE	(4) UNIT OF ISSUE	(5) QTY INC IN UNIT PACK	(6) QTY INC IN UNIT	(7) 15-DAY ORGANIZATIONAL MAINTENANCE ALW (a) 1-5	(b) 6-20	(c) 21-50	(d) 51-100	(8) ILLUSTRATION (a) FIG NO.	(b) ITEM NO.
X20 00017		EXTENSION, ARM: CARBURETOR AND GOVERNOR LINKAGE (97403) 1320DE0913	EA		1					2	12
X20 00018	2990-445-5358	GOVERNOR, GASOLINE ENGINE: ENGINE SPEED (77260) HA2000	EA		1						
P O 00019	2990-861-1280	ADAPTER, GOVERNOR DRIVE (77260) A2564	EA		1	•	•	•	•	3	4
P O R 00020	2990-679-8778	GOVERNOR ASSEMBLY: ENGINE SPEED (77260) BC3562	EA		1	•	•	•	•	2	2
X20 00040	4730-687-3321	CUP, OIL, LUBRICATION (77260) X895	EA		1					2	1
P O 00042	5330-250-6158	GASKET: DRAIN PLUG (77260) X983	EA		1	•	•	•	•	2	19
X20 00047	2990-423-3127	LEVER, SPEED, ADJUSTING (77260) 69554	EA		1					2	24
X20 00051	2990-354-3378	OILER: OIL LEVEL PLUG (77260) X2054	EA		1					2	3
0 00052	5315-423-3524	PIN, ESCUTCHEON: GOVERNOR NAMEPLATE MTG (77260) X895	EA		2	SEE GRP 2210					
X20 00055	3040-317-6754	PLATE, INSTRUCTION: GOVERNOR OIL LEVEL (77260) X1965	EA		1	SEE GRP 2210					
X20 00056	2990-246-9335	PLATE, NAME: GOVERNOR BODY (77260) X581	EA		1	SEE GRP 2210					
0 00064	5305-584-7610	SCREW, CAP, HEXAGON HEAD: BODY (77260) X1675	EA		1	•	•	•	•	2	20
X20 00078	2990-888-2895	ROD ASSEMBLY, GOVERNOR: GOVERNOR TO CARBURETOR EXTENSION (77260) A6404	EA		1					2	
X20 00083	2990-977-7365	PULLEY, GROOVED: ADAPTER DRIVE (76241) AC55	EA		1					3	3
0 00084	5305-013-9031	SETSCREW: PULLEY LOCKING (00000) 139093	EA		1	•	•	•	•	3	2

(1) SMR CODE / INDEX NO.	(2) FEDERAL STOCK NUMBER	(3) DESCRIPTION REFERENCE NO. & MFR. CODE USABLE ON CODE	(4) UNIT OF ISSUE	(5) QTY INC IN UNIT PACK	(6) QTY INC IN UNIT	(7) 15-DAY ORGANIZATIONAL MAINTENANCE ALW (a) 1-5	(b) 6-20	(c) 21-50	(d) 51-100	(8) ILLUSTRATION (a) FIG NO.	(b) ITEM NO.
X20 00100		CLAMP, CABLE (97403) 13200E0908	EA		1					5	15
X20 00101		LINK, CONTROL (97403) 13200E0909	EA		1					5	6
0 00102	5310-732-0846	NUT, SELF-LOCKING, HEXAGON; BELLCRANK SCREW AND THROTTLE CABLE CLAMP SCREW (96906) MS51968-1	EA		1	•	•	•	•	5	4
0 00103	5310-877-5797	NUT, SELF-LOCKING, HEXAGON; LINK MTG (96906) MS35650-102	EA		1	•	•	•	•	5	9
0 00104	5305-267-8974	SCREW, CAP, HEXAGON HEAD; BELLCRANK TO BRACKET AND CLAMP MTG (96906) MS90726-8	EA		2	•	•	•	•	5	1
X20 00105		STOP, WIRE; THROTTLE CONTROL CABLE (97403) 13200E0905	EA		1					5	16
0 00106	5305-984-6194	SCREW, MACHINE; WIRE STOP (96906) MS35206-246	EA		1	•	•	•	•	5	17
0 00107		WASHER, FLAT; BELLCRANK MTG (96906) MS27183-10	EA		1	•	•	•	•		
0 00108	5310-011-5707	WASHER, LOCK; LINK MTG (96906) MS35338-42	EA		1	•	•	•	•	5	5
0 00109	5310-582-5965	WASHER, LOCK; THROTTLE CABLE CLAMP SCREW (96906) MS35338-44	EA		1	•	•	•	•	5	14
0 00110	5310-877-5797	NUT, SELF-LOCKING, HEXAGON; SWIVEL STOP (96906) MS35650-102	EA		1	•	•	•	•	5	9
X20 00111	2990-888-6854	ROD ASSEMBLY, GOVERNOR (77260) A3939	EA		1						
X20 00112		BALL JOINT; GOVERNOR ROD (77260) X1532	EA		1					5	11
0 00113	5310-877-5797	NUT, SELF-LOCKING, HEXAGON; GOVERNOR ROD (96906) MS35650-102	EA		3	•	•	•	•	5	9
0 00114	5310-732-0846	NUT, SELF-LOCKING, HEXAGON; GOVERNOR ROD (96906) MS51968-1	EA		1	•	•	•	•	5	4

(1) Supply Code / Index No.	(2) Federal Stock Number	(3) Description / Reference No. & MFR. Code	Usable On Code	(4) Unit of Issue	(5) Qty Inc in Unit Pack	(6) Qty Inc in Unit	(7) 15-Day Organizational Maintenance Allowance (a) 1-5	(b) 6-20	(c) 21-50	(d) 51-100	(8) Illustration (a) Fig. No.	(b) Item No.
0 00132	5310-012-0622	NUT, PLAIN, HEXAGON: DISCONNECT CLIP (96906) MS35649-82	B	EA		2	•	•	•	•	42	18
0 00133	5310-013-4530	NUT, PLAIN, HEXAGON: OVERSPEED RELAY (96906) MS35649-62	B	EA		1	•	•	•	•	44	14
0 00134	5310-012-0614	NUT, PLAIN, HEXAGON: RELAY TO BRACKET (96906) MS35650-102	B	EA		2	•	•	•	•	44	26
0 00135	5310-012-0622	NUT, PLAIN, HEXAGON: RESISTOR BRACKET MTG (96906) MS35649-82	B	EA		2	SEE GSP 4411					
0 00136	5310-761-6882	NUT, PLAIN, HEXAGON: VARIABLE RESISTOR LEAD CLIP MTG (96906) MS51967-2	B	EA		1	SEE GSP 4411					
0 00138	5310-012-0614	NUT, PLAIN, HEXAGON: WIRING HARNESS CLIP MTG (96906) MS35650-102	B	EA		3	•	•	•	•	42	20
P D 00140	4940-996-7170	RELAY ASSEMBLY: OVERSPEED (16004) 33996	B	EA		1	•	•	•	•	44	32
XI 00141		RELAY: OVERSPEED (77342) PR3043	B	EA		1					44	28
X20 00142	5905-158-4725	RESISTOR, ADJUSTABLE: OVERSPEED (44655) 0501	B	EA		1	SEE GSP 4411					
0 00144	5305-068-0502	SCREW, CAP, HEXAGON HEAD: VARIABLE RESISTOR LEAD CLIP MTG (96906) MS90725-6	B	EA		1	SEE GSP 4411					
0 00145	5305-012-1832	SCREW, MACHINE: DISCONNECT CLIP (96906) MS35206-243	B	EA		2	•	•	•	•	42	15
0 00146	5305-996-1851	SCREW, MACHINE: RELAY TO BRACKET (96906) MS35207-267	B	EA		2	•	•	•	•	44	30
0 00147	5305-012-1832	SCREW, MACHINE: RESISTOR BRACKET MTG (96906) MS35206-243	B	EA		2	SEE GSP 4411					
0 00148	5305-013-2900	SCREW, MACHINE: WIRING HARNESS CLIP MTG (96906) MS35207-261	B	EA		3	•	•	•	•	42	14
0 00149	5310-577-5506	WASHER, FLAT: OVERSPEED RELAY (96906) MS15795-306	B	EA		1	•	•	•	•	44	12

(1) SMR CODE / INDEX NO.	(2) FEDERAL STOCK NUMBER	(3) DESCRIPTION / REFERENCE NO. & MFR. CODE / USABLE ON CODE	(4) UNIT OF ISSUE	(5) QTY INC IN UNIT PACK	(6) QTY INC IN UNIT	(7) 15-DAY ORGANIZATIONAL MAINTENANCE ALW (a) 1-5	(b) 6-20	(c) 21-50	(d) 51-100	(8) ILLUSTRATION (a) FIG NO.	(b) ITEM NO.
0 00193	5310-011-7047	NUT, PLAIN, HEXAGON: RELAY BRACKET MTG (96906) MS35690-324 A	EA		1	•	•	•	•		
0 00195	5310-275-6800	NUT, PLAIN, HEXAGON: RESISTOR TO TERMINAL BOARD, LEAD MTG (96906) MS35649-81 A	EA		3	•	•	•	•		
0 00205	5305-018-1317	SCREW, CAP, HEXAGON HEAD: RELAY BRACKET MTG A	EA		1	•	•	•	•		
0 00210	5305-068-0502	SCREW, CAP, HEXAGON HEAD: BRACKET MTG (96906) MS90725-6 A	EA		4	•	•	•	•	28	21
0 00211	5305-071-2241	SCREW, CAP, HEXAGON HEAD: SPACER MTG (96906) MS90725-10 A	EA		1	•	•	•	•		
X20 00213		SPACER: OVERSPEED RELAY BOX MTG (97403) 13200E0958 A	EA		1					28	13
X20 00214	5940-633-5519	SPLICE, CONDUCTOR: HARNESS CONNECTION (00000) 573000 A	EA		6					42	13
0 00215	5310-809-3078	WASHER, FLAT: BOX TO BRACKET, BOX TO WALL (96906) MS27183-11 A	EA		3	•	•	•	•	28	12
0 00217	5310-582-5965	WASHER, LOCK: BRACKET TO BOX, BRACKET TO WALL (96906) MS35338-44 A	EA		5	•	•	•	•	28	19
0 00219	5310-012-1637	WASHER, LOCK: TERMINAL BLOCK (96906) MS35337-95 A	EA		8	•	•	•	•		
M 0 00220		WIRING HARNESS: OVERSPEED TO ENGINE LEAD (97403) 13200E0956 MANUFACTURE FROM:	EA		1						
X20 00221	5975-152-1046	CONNECTOR, BOX: ELBOW (59730) 321	EA		2						
X20 00222		CONNECTOR, LINE (79950) 877	EA		2						
X20 00223		INSULATION, SLEEVE (79950) 835	EA		4						

SECTION II

PRESCRIBED LOAD ALLOWANCE

(1) Federal stock number	(2) Description / usable on code	(3) Qty inc in unit pack	(4) 15-Day org maint. alw (A) 1-5	(B) 6-30	(C) 31-60	(D) 61-100
	GROUP 22—BODY, CHASSIS OR HULL ACCESSORY ITEMS					
	2202—ACCESSORY ITEMS					
9905-205-2795	REFLECTOR, INDICATING, CLEARANCE: red (96906) MS35387-1	4			2	2
	GROUP 44—WELDING EQUIPMENT					
	4403—BRUSH HOLDER ASSEMBLY					
5977-861-7784	BRUSH, ELECTRICAL CONTACT: dc (28835) DW 825	4	2	4	8	17
5977-655-2555	BRUSH, ELECTRICAL CONTACT: ac (28835) AW1470	4	2	4	8	17
	4409—PROTECTIVE DEVICES, ELECTRICAL					
5920-280-5002	FUSE, CARTRIDGE: 10 amp B (75915) 314010	8	2	2	4	8
5920-539-6920	FUSE, CARTRIDGE: 80 amp B (75915) 314080	8	2	2	4	8
	4414—RADIO INTERFERENCE SUPPRESSION					
5910-504-7418	CAPACITOR, FIXED, PAPER DIELECTRIC: control panel (28835) CA481	2			2	2
5910-561-8847	CAPACITOR, FIXED, PAPER DIELECTRIC: control panel (28835) CA504	6		2	3	5
5910-569-8913	CAPACITOR, FIXED, PAPER DIELECTRIC: control panel (28835) CA484	1		2	3	5

(1) SMR CODE / INDEX NO.	(2) FEDERAL STOCK NUMBER	(3) DESCRIPTION REFERENCE NO. & MFR. CODE — USABLE ON CODE	(4) UNIT OF ISSUE	(5) QTY INC IN UNIT PACK	(6) QTY INC IN UNIT	(7) 15-DAY ORGANIZATIONAL MAINTENANCE ALW (a) 1-5	(b) 6-20	(c) 21-50	(d) 51-100	(8) ILLUSTRATION (a) FIG NO	(b) ITEM NO
00001		SECTION III - REPAIR PARTS FOR ORGANIZATIONAL MAINTENANCE									
00002		GROUP 03 - FUEL SYSTEM									
00003		0306 - TANKS, LINES, FITTINGS									
X20 00004		BOLT, U: TUBE TO BRACKET (97403) 13200E5249	EA		1					27	5
0 00005	5310-550-0777	NUT, PLAIN, HEXAGON: SUPPORT AND U-BOLT NTS (96906) MS35690-402	EA		4	•	•	•	•	27	1
0 00006	5305-639-8116	SCREW, CAP, HEXAGON HEAD: SUPPORT NTS (96906) MS35297-8	EA		2	•	•	•	•	27	11
X20 00007		SUPPORT: FILLER TUBE (97403) 13200E5248	EA		1					27	3
X20 00008		TUBE ASSEMBLY, FILLER: GAS TANK (97403) 13200E5247	EA		1					27	4
X1 00009		TUBE, FILLER (97403) 13200E5250	EA		1						
0 00010	5310-582-5677	WASHER, FLAT: SUPPORT AND U-BOLT NTS (96906) MS15795-310	EA		6	•	•	•	•		
0 00011	5310-582-5965	WASHER, LOCK: SUPPORT AND U-BOLT NTS (96906) MS35338-44	EA		4	•	•	•	•	27	2
00012		0308 - ENGINE SPEED GOVERNOR									
X20 00014	2990-980-5111	BLOCK, CLAMP: DRIVE ASSEMBLY NTS (97403) 13200E0912	EA		1					3	8
X20 00015	2990-980-5111	BLOCK, CLAMP: GOVERNOR TO BRACKET NTS (97403) 13200E0912	EA		1					2	14
X20 00016		BRACKET: GOVERNOR NTS (97403) 13200E0911	EA		1					2	15

(1) SMR CODE / INDEX NO.	(2) FEDERAL STOCK NUMBER	(3) DESCRIPTION REFERENCE NO. & MFR. CODE — USABLE ON CODE	(4) UNIT OF ISSUE	(5) QTY INC IN UNIT PACK	(6) QTY INC IN UNIT	(7) 15-DAY ORGANIZATIONAL MAINTENANCE ALW (a) 1-5	(b) 6-20	(c) 21-50	(d) 51-100	(8) ILLUSTRATION (a) FIG NO.	(b) ITEM NO.
0 00085	5305-269-2805	SCREW, CAP, HEXAGON HEAD: GOVERNOR ADAPTER MTG TO BRACKET (96906) MS90726-62	EA		2	•	•	•	•	3	11
0 00086	5305-269-2805	SCREW, CAP, HEXAGON HEAD: GOVERNOR TO BRACKET (96906) MS90726-62	EA		2	•	•	•	•	2	16
P 0 00087	2990-895-6364	SHAFT ASSEMBLY, GOVERNOR DRIVE: FLEXIBLE (57711) 3X853342-9A	EA		1	•	•	•	•	3	
X20 00088		CABLE, DRIVE (57711) 3X853342-13	EA		1					3	6
X20 00089		HOUSING, CABLE (57711) 3X853342-14	EA		1					3	5
X20 00090		RING, SNAP (57711) 3X853342-5	EA		1					3	7
0 00091	5310-047-6043	WASHER, FLAT: GOVERNOR DRIVE ASSEMBLY MTG (00000) 0161877	EA		2	•	•	•	•	3	9
0 00092	5310-047-6043	WASHER, FLAT: GOVERNOR TO BRACKET (00000) 0161877	EA		2	•	•	•	•	2	18
0 00093	5310-018-7123	WASHER, LOCK: GOVERNOR DRIVE ASSEMBLY MTG (00000) 187123	EA		2	•	•	•	•	3	10
0 00094	5310-018-7123	WASHER, LOCK: GOVERNOR TO BRACKET (00000) 187123	EA		2	•	•	•	•	2	17
00095		0312 - ACCELERATOR, THROTTLE OR CHOKE CONTROL									
X20 00096		LINKAGE ASSEMBLY, THROTTLE (97403) 13200E0903	EA		1						
X20 00097		BELLCRANK: THROTTLE (97403) 13200E0906	EA		1					5	3
X20 00098		BRACKET: BELLCRANK (97403) 13200E0908	EA		1					5	2
X20 00099		CABLE, CONTROL: WELDER THROTTLE (97403) 13200E0907	EA		1					5	13

(1) SMR CODE / INDEX NO.	(2) FEDERAL STOCK NUMBER	(3) DESCRIPTION — REFERENCE NO. & MFR. CODE	USABLE ON CODE	(4) UNIT OF ISSUE	(5) QTY INC. IN UNIT PACK	(6) QTY INC. IN UNIT	(7) 15-DAY ORGANIZATIONAL MAINTENANCE ALW (a) 1-5	(b) 6-20	(c) 21-50	(d) 51-100	(8) ILLUSTRATION (a) FIG. NO.	(b) ITEM NO.
X20 00115		ROD, THROTTLE: GOVERNOR ROD (77860) 05756		EA		1					5	10
0 00116	5310-011-5707	WASHER, LOCK: GOVERNOR ROD (96906) MS35338-42		EA		1	•	•	•	•	5	5
X20 00117		SPRING, RETURN: ACCELERATOR (97403) 13200E0915		EA		1					5	12
X20 00118		STOP, SWIVEL: CARBURETOR ROD (97403) 13200E0914		EA		1					5	8
00119		GROUP 06 - ELECTRICAL SYSTEM										
00120		0606 - ENGINE SAFETY CONTROLS										
X20 00122		BRACKET: OVERSPEED RELAY BOX MTG (97403) 13200E0957	A	EA		1					28	20
X20 00123		CLAMP, LOOP (96906) MS21333-009	A	EA		3						
X20 00124		INSTALLATION, OVERSPEED (16004) 34200	B	EA		1						
X20 00125		BRACKET: RELAY (16004) 33971	B	EA		1					44	29
X20 00126	5905-355-8575	BRACKET, RESISTOR (44655) 9	B	EA		1	SEE GAP 4411					
X20 00127	5340-543-3292	CLIP: WIRING HARNESS (96906) MS35340-8	B	EA		3					42	23
X20 00128	5340-806-7226	CLIP, DISCONNECT: WIRING HARNESS (97068) 2253	B	EA		2					42	16
X20 00129		CLIP, WIRE: VARIABLE RESISTOR ELECTRICAL LEAD (16004) 34461	B	EA		1	SEE GAP 4411					
X20 00130		CONNECTOR, ELECTRICAL: WIRING HARNESS (81757) 2323	B	EA		1					42	13

(1) SMR CODE / INDEX NO.	(2) FEDERAL STOCK NUMBER	(3) DESCRIPTION REFERENCE NO. & MFR. CODE	USABLE ON CODE	(4) UNIT OF ISSUE	(5) QTY INC IN UNIT PACK	(6) QTY INC IN UNIT	(7) 15-DAY ORGANIZATIONAL MAINTENANCE ALW (a) 1-5	(b) 6-20	(c) 21-50	(d) 51-100	(8) ILLUSTRATION (a) FIG NO.	(b) ITEM NO.
0 00150	5310-809-8946	WASHER, FLAT: RELAY TO BRACKET (96906) MS27183-8	B	EA		2	•	•	•	•	44	27
0 00151	5310-809-8946	WASHER, FLAT: WIRING HARNESS CLIP MTG (96906) MS27183-8	B	EA		3	•	•	•	•	42	22
0 00152	5310-013-8530	WASHER, LOCK: DISCONNECT CLIP (96906) MS35333-21	B	EA		2	•	•	•	•	42	17
0 00153	5310-013-8526	WASHER, LOCK: OVERSPEED RELAY (96906) MS35333-20	B	EA		2	•	•	•	•	44	13
0 00154	5310-043-2226	WASHER, LOCK: RELAY TO BRACKET (96906) MS35338-24	B	EA		2	•	•	•	•	44	18
0 00155	5310-013-8530	WASHER, LOCK: RESISTOR BRACKET MTG (96906) MS35333-21	B	EA		4	SEE CHART 44-11					
0 00156	5310-012-1637	WASHER, LOCK: VARIABLE RESISTOR LEAD CLIP MTG (96906) MS35338-25	B	EA		1	SEE CHART 44-11					
0 00157	5310-043-2226	WASHER, LOCK: WIRING HARNESS CLIP MTG (96906) MS35338-24	B	EA		3	•	•	•	•	42	19
X20 00158		WIRING HARNESS: IGNITION SWITCH (97403) 13200E0955		EA		1					42	5
X20 00159		WIRING HARNESS: RELAY (96906) 13200E0954		EA		1					42	21
0 00160	5310-761-6882	NUT, PLAIN, HEXAGON: BRACKET AND CLAMP MTG (96906) MS51967-2	A	EA		8	•	•	•	•	28	18
X20 00161		RELAY ASSEMBLY, OVERSPEED (97403) 13200E0953	A	EA		1						
P 0 00162	6930-735-6111	RELAY ASSEMBLY, OVERSPEED (28035) DA999	A	EA		1	•	•	•	•		
X20 00163	5935-283-2054	ADAPTER, CONNECTOR	A	EA		2						
X20 00192	5975-284-9305	NIPPLE, CABLE	A	EA		4						

(1) SMR CODE / INDEX NO.	(2) FEDERAL STOCK NUMBER	(3) DESCRIPTION REFERENCE NO. & MFR CODE — USABLE ON CODE	(4) U/M OF ISSUE	(5) QTY INC IN UNIT PACK	(6) QTY INC IN UNIT	(7) 15 DAY ORGANIZATIONAL MAINTENANCE ALW (a) 1.5	(b) 6.20	(c) 21.50	(d) 51.100	(8) ILLUSTRATION (a) FIG NO	(b) ITEM NO
XRO 00224		INSULATION, SLEEVE (79550) 8354	EA		2						
XRO 00225	5940-534-0991	TERMINAL, LUG (96906) MS35436-6	EA		4						
XRO 00226	5940-557-2343	TERMINAL, LUG (96906) MS35436-11	EA		2						
XRO 00227		TERMINAL, WIRE (79550) 1063	EA		2						
P O 00228	6145-299-4430	WIRE, ELECTRICAL: COPPER, TINNED, FINISHED, NO. 14 AWG (13 FT REQUIRED)	FT			SEE GRP 9501					
P O 00229	6145-268-0328	WIRE, ELECTRICAL: COPPER, TINNED, FINISHED, NO. 12 AWG (8 FT REQUIRED)	FT			SEE GRP 9501					
00230		0606 - MISCELLANEOUS ITEMS									
XRO 00233		CLAMP, LOOP: HARNESS TO CHASSIS (96906) MS21333-009 A	EA		1					42	23
XRO 00234	5325-720-9058	GROMMET: WELDER CABLES (96906) MS35490-20 A	EA		2					11	13
P O 00239	5930-738-5206	SWITCH, PUSH: BRAKE LOCK (92566) BC159 B	EA		1	•	•	•	•	85	12
A O 00242		SCREW, ASSEMBLED WASHER: CLAMP MTG A	EA		1						
O 00243	5305-013-2900	SCREW, TAPPING, THREAD FORMING: CLAMP MTG (96906) MS35207-261 A	EA		1	•	•	•	•	85	14
O 00244	5310-809-0936	WASHER, LOCK: CLAMP MTG (96906) MS27183-6 A	EA		1	•	•	•	•	42	22
O 00246	5305-013-1979	SCREW, MACHINE: BRAKE LOCK MTG A	EA		2	•	•	•	•	42	11

(1) SMR CODE / INDEX NO.	(2) FEDERAL STOCK NUMBER	(3) DESCRIPTION / REFERENCE NO. & MFR. CODE / USABLE ON CODE	(4) UNIT OF ISSUE	(5) QTY INC IN UNIT PACK	(6) QTY INC IN UNIT	(7) 75-DAY ORGANIZATIONAL MAINTENANCE ALW (a) 1-5	(b) 6-20	(c) 21-50	(d) 51-100	(8) ILLUSTRATION (a) FIG NO.	(b) ITEM NO.
P 0 00247	2590-738-7535	SWITCH, BRAKE LOCK (00000) 7387535 A	EA		1	•	•	•	•	42	12
X20 00253		WIRING HARNESS: BRAKE LOCK SWITCH TO BRAKE LOCK (97403) 13200E0974	EA		1					42	1
X1 00254	5340-205-7705	BUSHING, RUBBER (00000) 572205	EA		2						
X1 00255	5935-300-9909	COVER, ELECTRICAL (00000) 573010	EA		1						
X1 00256	5940-057-2929	FERRULE, ELECTRICAL CONDUCTOR (00000) 572929	EA		2						
X1 00257	5935-768-7042	SHIELD, ELECTRICAL (00000) 573007	EA		1						
X20 00258		WIRING HARNESS: BRAKE LOCK TO CIRCUIT BREAKER (97403) 13200E0975	EA		1					42	2
X1 00259		CONNECTOR (00000) 7962726	EA		1						
X1 00260	5935-776-3642	CONNECTOR, PLUG, ELECTRICAL (00000) 7762642	EA		1						
X1 00261	5940-057-2929	FERRULE, ELECTRICAL CONDUCTOR (00000) 572929	EA		4						
X1 00262	5325-350-9277	GROMMET, CABLE (00000) 573005	EA		1						
X1 00263	5935-768-7042	SHIELD, CONNECTOR: FEMALE (00000) 573007	EA		1						
00273		0611 - HORN									
X20 00274		BRACKET, HORN (97403) 13200E0916	EA		1					5	7

(1) SMR CODE / INDEX NO	(2) FEDERAL STOCK NUMBER	(3) DESCRIPTION REFERENCE NO. & MFR. CODE	USABLE ON CODE	(4) UNIT OF ISSUE	(5) QTY INC IN UNIT PACK	(6) QTY INC IN UNIT	(7) 15-DAY ORGANIZATIONAL MAINTENANCE ALW (a) 1-5	(b) 6-20	(c) 21-50	(d) 51-100	(8) ILLUSTRATION (a) FIG NO	(b) ITEM NO
X20 00311		ESCUTCHEON: SHIFT LEVER GUIDE (97403) 13200E0936		EA		1					7	2
X20 00312	5355-667-6053	KNOB, LEVER: SHIFT	A	EA		1					7	3
X20 00313	3805-447-3521	KNOB, LEVER, SHIFT (75376) 5442-6	B	EA		1					7	3
X20 00314		LEVER, SHIFT (97403) 13200E0937		EA		1					7	4
0 00315	5310-695-9371	NUT, PLAIN, HEXAGON: CLEVIS LOCKING AND LEVER MTG (96906) MS35690-825		EA		4	•	•	•	•	7	7
0 00316	5310-880-7745	NUT, SELF-LOCKING, HEXAGON: HAND LEVER SUPPORT MTG (96906) MS51968-11		EA		2	•	•	•	•	7	19
0 00317	5315-298-1481	PIN, COTTER: CLEVIS PIN (00000) 137200		EA		2	•	•	•	•	7	16
0 00318	5315-842-3154	PIN, STRAIGHT, HEADED: CLEVIS (96906) MS35810-36		EA		2	•	•	•	•	7	24
X20 00319		ROD: SHIFTER DECLUTCHER LEVER (97403) 13200E0935		EA		1					7	18
0 00320	5305-018-0155	SCREW, CAP, HEXAGON HEAD: HAND LEVER SUPPORT MTG (96906) MS35297-92		EA		2	•	•	•	•	7	21
0 00321	5305-682-5459	SCREW, CAP, HEXAGON HEAD: SHIFT LEVER MTG (96906) MS35296-123		EA		1	•	•	•	•	7	22
0 00322	5305-014-5207	SCREW, TAPPING, THREAD FORMING: ESCUTCHEON MTG (00000) 142507		EA		4	•	•	•	•	7	1
X20 00324		SPRING, HELICAL, COMPRESSION: SHIFT LEVER MTG (97403) 13200E0939		EA		1					7	5
X20 00325		SUPPORT: HAND LEVER (97403) 13200E0938		EA		1					7	23
0 00326	5310-050-2268	WASHER, FLAT: SHIFT LEVER MTG (96906) MS15795-218		EA		1	•	•	•	•	7	6

(1) SMR CODE / INDEX NO.	(2) FEDERAL STOCK NUMBER	(3) DESCRIPTION / REFERENCE NO. & MFR. CODE / USABLE ON CODE	(4) UNIT OF ISSUE	(5) QTY INC IN UNIT PACK	(6) QTY INC IN UNIT	(7) 15-DAY ORGANIZATIONAL MAINTENANCE ALW (a) 1-5	(b) 6-20	(c) 21-50	(d) 51-100	(8) ILLUSTRATION (a) FIG NO	(b) ITEM NO
X20 00341		ROD, OPERATING: LOWER (97403) 13200E0946 A	EA		1					8	12
X20 00342		ROD, OPERATING: LOWER (16004) 31511 B	EA		1					8	12
X20 00343		ROD, OPERATING: UPPER (97403) 13200E0950 A	EA		1					8	9
X20 00344		ROD, OPERATING: UPPER (16004) 33959 B	EA		1					8	9
0 00345	5305-824-4787	SCREW, CAP, HEXAGON HEAD: BELLCRANK BRACKET MTG (96906) MS90726-230	EA		1	•	•	•	•	8	4
0 00346	5305-269-2805	SCREW, CAP, HEXAGON HEAD: LOWER BELLCRANK BRACKET MTG (96906) MS90726-62	EA		4	•	•	•	•	8	6
0 00347	5305-710-4191	SCREW, CAP, HEXAGON HEAD: SHIFT BRACKET MTG (96906) MS90726-86	EA		1	•	•	•	•	7	26
0 00348	5305-044-5503	SCREW, CAP, HEXAGON HEAD: SHIFT BAR BRACKET MTG (96906) MS90725-160	EA		1	•	•	•	•	7	28
0 00349	5305-269-2807	SCREW, CAP, HEXAGON HEAD: SHIFTER BAR MTG (96906) MS90726-64	EA		1	•	•	•	•	7	12
P 0 00350	4940-967-9099	SHIFTER AND SHOE ASSEMBLY: DECLUTCHER (97403) 13200E0931	EA		1	•	•	•	•	7	11
XI 00351		SHIFTER: DECLUTCHER (97403) 13200E0932	EA		1						
XI 00352		SHOE, SHIFTER (97403) 13200E0933	EA		2						
0 00353	5310-080-6004	WASHER, FLAT: LOWER BELLCRANK BRACKET MTG (96906) MS27183-14	EA		7	•	•	•	•	8	3
0 00354	5310-194-0743	WASHER, FLAT: SHIFT BAR BRACKET MTG (96906) MS35338-26	EA		1	•	•	•	•	7	27
0 00355	5310-087-7493	WASHER, FLAT: SHIFT BAR BRACKET MTG (96906) MS27183-13	EA		1	•	•	•	•	7	25

(1) SMR CODE / INDEX NO.	(2) FEDERAL STOCK NUMBER	(3) DESCRIPTION REFERENCE NO. & MFR. CODE — USABLE ON CODE	(4) UNIT OF ISSUE	(5) QTY INC. IN UNIT PACK	(6) QTY INC. IN UNIT	(7) 15-DAY ORGANIZATIONAL MAINTENANCE ALW (a) 1-5	(b) 6-20	(c) 21-50	(d) 51-100	(8) ILLUSTRATION (c) FIG. NO.	(b) ITEM NO.
X20 00429		BRACE ASSEMBLY: DOOR (97403) 13200E9019 (SAME AS BRACE ASSEMBLY, STOCK NO. (97403) 13200E9075, EXCEPT WHERE INDIVIDUAL COMPONENTS ARE ANNOTATED)	EA		1						
X20 00430		BRACE ASSEMBLY: DOOR (97403) 13200E9075	EA		3						
0 00431	5315-639-5820	PIN, COTTER: ROD TO FITTING (96906) MS24665-134	EA		1	•	•	•	•	13	19
X20 00432		ROD AND BRACE ASSEMBLY (97403) 13200E9076	EA		1					13	15
X20 00433		BASE: DOOR BRACE (97403) 13200E9078	EA		1						
X20 00434		FITTING, ROD: DOOR BRACE (97403) 13200E9077	EA		1						
0 00435		WASHER, FLAT: DOOR BRACE, 1/4 IN. THD SIZE (96906) MS27183-10	EA		1	•	•	•	•		
X20 00436	4940-896-7250	ROD, BRACE: DOOR (97403) 13200E9079-2 (USED WITH BRACE ASSEMBLY, STOCK NO. (97403) 13200E9019 ONLY)	EA		1					13	22
X20 00437	4940-896-7251	ROD, BRACE: DOOR (97403) 13200E9079-1 (USED WITH BRACE ASSEMBLY, STOCK NO. (97403) 13200E9075 ONLY)	EA		1					13	16
0 00438	5310-087-7493	WASHER, FLAT: 5/16 IN. THD SIZE (96906) MS27183-13	EA		1	•	•	•	•		
X20 00458	4940-896-7259	DOOR ASSEMBLY: FRONT DOOR, LEFT SIDE (97403) 13200E9064-2	EA		1					20	2
X20 00459	2540-896-7235	HINGE, DOOR (97403) 13200E9073-3	EA		1					13	4
X20 00460	2540-896-7261	LOCK ASSEMBLY, DOOR (97403) 13200E9065-3	EA		1						

(1) SMR CODE — — INDEX NO.	(2) FEDERAL STOCK NUMBER	(3) DESCRIPTION REFERENCE NO. & MFR. CODE — USABLE ON CODE	(4) UNIT OF ISSUE	(5) QTY INC IN UNIT PACK	(6) QTY INC IN UNIT	(7) 15-DAY ORGANIZATIONAL MAINTENANCE ALW (a) 1-5	(b) 6-20	(c) 21-50	(d) 51-100	(8) ILLUSTRATION (a) FIG NO.	(b) ITEM NO.
0 00476	5320-117-6826	RIVET, SOLID: RIVET TO BODY AND DOOR, 1/8 IN. DIA X 1/4 LG (96906) MS20470AD4-4	EA		10	•	•	•	•	27	8
X20 00477		SPRING: FUEL ACCESS DOOR (97403) 13200E9171	EA		1					27	7
X20 00478		DOOR ASSEMBLY: LOWER LEFT REAR (97403) 13200E9003	EA		1					20	3
X20 00479	2540-896-7262	HINGE, DOOR (97403) 13200E9073-2	EA		1					13	28
X20 00480	2540-896-7258	LOCK ASSEMBLY, DOOR (97403) 13200E9065-2	EA		1						
X1 00481		CLIP, GUIDE: LATCH ROD (97403) 13200E9170	EA		2					13	23
X1 00482		LOCK, DOOR (97403) 13200E9066	EA		1					13	10
X1 00483		ROD, LATCH (97403) 13200E9074	EA		2					13	14
X1 00484		SHIM, LATCH ROD: 0.125 IN. THK (97403) 13200E9067-1	EA		2					13	24
X20 00485		PANEL: EXTERIOR, SIDE DOOR (97403) 13200E9071-2	EA		1						
X20 00486		PANEL: INTERIOR, SIDE DOOR (97403) 13200E9015	EA		1						
0 00487	5320-582-3268	RIVET, BLIND: RIVET TO BODY, DOOR LOCK MTG (96906) MS20600AD6-3	EA		23	•	•	•	•	13	8
0 00488	5320-117-6852	RIVET, BLIND: RIVET TO DOOR (96906) MS20470AD6-7	EA		17	•	•	•	•	13	7
0 00489	5305-016-4405	SCREW, TAPPING, THREAD FORMING: LATCH ROD GUIDE MOUNTING (00000) 164405	EA		4	•	•	•	•	13	20
X20 00490		Z-BAR: DOOR (97403) 13200E9072-3	EA		1						

(1) SMR CODE / INDEX NO.	(2) FEDERAL STOCK NUMBER	(3) DESCRIPTION / REFERENCE NO. & MFR. CODE / USABLE ON CODE	(4) UNIT OF ISSUE	(5) QTY INC IN UNIT PACK	(6) QTY INC IN UNIT	(7) 15-DAY ORGANIZATIONAL MAINTENANCE ALW (a) 1-5 (b) 6-20 (c) 21-50 (d) 51-100	(8) ILLUSTRATION (a) FIG NO	(b) ITEM NO
X20 00528		PLATE, INSTRUCTION: GENERATOR ENGAGING AND DISENGAGING (97403) 13200E9062	EA		1	SEE OPP 2210		
X20 00529		PLATE, INSTRUCTION: THROTTLE (97403) 13200E9063	EA		1	SEE OPP 2210		
X20 00537		SCREEN ASSEMBLY: WELDED CONTROL PANEL, REAR (97403) 13200E9139	EA		1		14	6
X20 00572		BRACE ASSEMBLY: DOOR (97403) 13200E9019 (SAME AS BRACE ASSEMBLY, STOCK NO. (97403) 13200E9075, EXCEPT WHERE INDIVIDUAL COMPONENTS ARE ANNOTATED)	EA		1			
X20 00573		BRACE ASSEMBLY: DOOR (97403) 13200E9075	EA		1			
0 00574	5315-039-5820	PIN, COTTER: ROD TO FITTING (96906) MS24665-134	EA		1	• • • •	13	19
X20 00575		ROD AND BRACE ASSEMBLY (97403) 13200E9076	EA		1		13	15
X20 00576		BASE: DOOR BRACE (97403) 13200E9078	EA		1			
X20 00577		FITTING, ROD: DOOR BRACE (97403) 13200E9077	EA		1			
X20 00578		WASHER, FLAT: DOOR BRACE, 1/8 IN. THD SIZE (96906) MS27183-10	EA		1			
X20 00579	1560-056-7250	ROD, BRACE: DOOR (97403) 13200E9079-2 (USED WITH BRACE ASSEMBLY, STOCK NO. (97403) 13200E9019 ONLY)	EA		1		13	22
X20 00580	1560-056-7251	ROD, BRACE: DOOR (97403) 13200E9079-1 (USED WITH BRACE ASSEMBLY, STOCK NO. (97403) 13200E9075 ONLY)	EA		1		13	16
X20 00581	5310-087-7493	WASHER, FLAT: 5/16 IN. THD SIZE (96906) MS27183-13	EA		1			

(1) SMR CODE / INDEX NO	(2) FEDERAL STOCK NUMBER	(3) DESCRIPTION REFERENCE NO. & M.F.R. CODE — USABLE ON CODE	(4) UNIT OF ISSUE	(5) QTY INC IN UNIT PACK	(6) QTY INC IN UNIT	(7) 15 DAY ORGANIZATIONAL MAINTENANCE ALW (a) 1.5	(b) 6.20	(c) 21.50	(d) 51.100	(8) ILLUSTRATION (a) FIG NO.	(b) ITEM NO.
00275		GROUP 08 - POWER TRANSFER									
00276		0802 - CLUTCH AND CLUTCH CONTROLS									
0 00283	4730-050-4203	FITTING, LUBRICATION: CLUTCH (96906) MS15001-1	EA		1	•	•	•	•	6	6
0 00284	4730-877-1068	FITTING, LUBRICATION: GEAR (97733) 1909	EA		1	•	•	•	•		
00300		0803 - GEAR SHIFT CONTROLS									
X20 00301		BAR: DECLUTCHER SHIFTER (97403) 13200E0965	EA		1					7	10
X20 00302		BELLCRANK: ROD OPERATING, LOWER (97403) 13200E0951	EA		1					8	13
X20 00303		BRACKET: BELLCRANK, LOWER (97403) 13200E0959	EA		1					8	5
X20 00304		BRACKET: SHIFT DECLUTCHER BAR (97403) 13200E0965	EA		1					7	29
X20 00305	5340-909-0823	CLEVIS, ROD END: LOWER OPERATING ROD, BELLCRANK TO BELLCRANK, LOWER BELLCRANK TO THROWOUT ARM — A (96906) MS35012-4	EA		4					8	8
X20 00306	5340-254-4640	CLEVIS, ROD END: LOWER ROD, BELLCRANK TO THROWOUT ARM, AND ROD, BELLCRANK TO BELLCRANK — B (16004) 11014	EA		4					8	8
X20 00307		END: ADJUSTING TUBE, SHIFT BAR BRACKET TO SHIFT LEVER (16004) 22768	EA		1					7	31
0 00308	4730-279-0360	FITTING, LUBRICATION: SHIFT LEVER, SHOE END — B (70270) 1641	EA		1	•	•	•	•	7	30
X20 00309		LEVER ASSEMBLY: SHIFTER DECLUTCHER (97403) 13200E0934	EA		1						
X20 00310		CLEVIS, ROD END: SHIFTER DECLUTCHER ROD, ADJUSTING (00000) 144245	EA		2					7	17

(1) SMR CODE / INDEX NO.	(2) FEDERAL STOCK NUMBER	(3) DESCRIPTION / REFERENCE NO. & MFR. CODE / USABLE ON CODE	(4) UNIT OF ISSUE	(5) QTY INC IN UNIT PACK	(6) QTY INC IN UNIT	(7) 15-DAY ORGANIZATIONAL MAINTENANCE ALW (a) 1-5	(b) 6-20	(c) 21-50	(d) 51-100	(8) ILLUSTRATION (a) FIG NO.	(b) ITEM NO.
0 00327	5310-194-0783	WASHER, LOCK: HAND LEVER SUPPORT MTG (96906) MS35338-28	EA		2	•	•	•	•	7	20
X20 00328		LEVER, SHIFT (97403) 13200E0948	EA		1					7	15
0 00329	5310-732-0559	NUT, PLAIN, HEXAGON: CLEVIS AND LOWER BELLCRANK MTG (96906) MS51968-8	EA		9	•	•	•	•	8	1
0 00330	5310-732-0960	NUT, PLAIN, HEXAGON: SHIFT BAR BRACKET TO SHIFT LEVER END, ADJUSTING (96906) MS51968-14	EA		1	•	•	•	•	7	34
0 00331	5310-763-8905	NUT, PLAIN, HEXAGON: SHIFT BRACKET MTG (96906) MS51968-20	EA		1	•	•	•	•	7	33
0 00332	5310-880-7745	NUT, PLAIN, HEXAGON: SHIFTER BAR AND BRACKET MTG (96906) MS51968-11	EA		2	•	•	•	•	7	8
0 00333	5315-816-1794	PIN, COTTER: CLEVIS PINS (96906) MS24665-289 A	EA		1	•	•	•	•	8	10
0 00334	5315-842-3044	PIN, COTTER: CLEVIS PIN, LOWER OPERATING ROD PIN (96906) MS24665-283 B	EA		1	•	•	•	•	8	11
0 00335	5315-839-5822	PIN, COTTER: LOWER BELLCRANK TO UPPER BELLCRANK (96906) MS24665-353 B	EA		3	•	•	•	•	8	10
0 00336	5315-839-5822	PIN, COTTER: SHIFTER SHOE PIN (96906) MS24665-353 A	EA		1	•	•	•	•	7	13
0 00337	5315-842-3044	PIN, COTTER: SHIFTER SHOE PIN (96906) MS24665-283 B	EA		1	•	•	•	•	7	13
0 00338	5315-081-7033	PIN, STRAIGHT, HEADED: CLEVIS AND SHIFTER LEVER TO SHIFTER BAR (96906) MS20392-5C27	EA		5	•	•	•	•	7	14
0 00339	5315-081-7042	PIN, STRAIGHT, HEADED: CLEVIS LEVER TO SHIFT BRACKET (96906) MS20392-7C31	EA		1	•	•	•	•	7	29
0 00340	5315-081-7033	PIN, STRAIGHT, HEADED: LOWER OPERATING ROD THROWOUT ARM CLEVIS AND LOWER BELLCRANK TO UPPER BELLCRANK (96906) MS20392-5C27 B	EA		5	•	•	•	•	8	7

(1) SMR CODE / INDEX NO.	(2) FEDERAL STOCK NUMBER	(3) DESCRIPTION — REFERENCE NO. & MFR. CODE — USABLE ON CODE	(4) UNIT OF ISSUE	(5) QTY INC IN UNIT PACK	(6) QTY INC IN UNIT	(7) 15-DAY ORGANIZATIONAL MAINTENANCE ALW (a) 1-5	(b) 6-20	(c) 21-50	(d) 51-100	(8) ILLUSTRATION (a) FIG NO.	(b) ITEM NO.
0 00356	5310-543-2709	WASHER, LOCK: LOWER BELLCRANK BRACKET MTG (96906) MS35338-27	EA		4	•	•	•	•	8	2
0 00357	5310-012-1578	WASHER, LOCK: SHIFT BAR BRACKET MTG (96906) MS35338-31	EA		1	•	•	•	•	7	32
0 00358	5310-637-9581	WASHER, LOCK: SHIFTER BAR AND BRACKET MTG (96906) MS35338-46	EA		2	•	•	•	•	7	9
00359		GROUP 09 - PROPELLER SHAFT									
00360		0900 - PROPELLER SHAFTS									
0 00362	4730-010-9350	FITTING, LUBRICATION: CROSS ASSEMBLY	EA		4	•	•	•	•	9	3
0 00363	4730-050-4208	FITTING, LUBRICATION: SPLINED YOKE AND FEMALE YOKE	EA		2	•	•	•	•	9	10
00416		GROUP 18 - BODY, CAB, HOOD AND HULL									
00417		1812 - SPECIAL PURPOSE BODIES									
0 00419	5306-012-5640	BOLT, SQUARE NECK: BLOCK MTG (00000) 126540	EA		4	•	•	•	•	21	2
X20 00421	4940-856-7244	BRACKET, FLOOD LIGHT (97403) 13200E9114-1	EA		4					10	33
X20 00422	4940-856-7245	BRACKET, FLOOD LIGHT (97403) 13200E9114-2	EA		4					10	32
X20 00423		CLAMP, HOOK TYPE: ROOF TO BODY (06004) HH9	EA		2					17	6
X1 00424		PLATE, STRIKE: ROOF CLAMP (06004) DH1	EA		2					17	5
X20 00425		CLIP, DOOR LOCK (97403) 13200E9170	EA		2					17	21

(1) SMR CODE / INDEX NO	(2) FEDERAL STOCK NUMBER	(3) DESCRIPTION REFERENCE NO. & MFR. CODE — USABLE ON CODE	(4) UNIT OF ISSUE	(5) QTY INC IN UNIT PACK	(6) QTY INC IN UNIT	(7) 15 DAY ORGANIZATIONAL MAINTENANCE ALW (a) 1-5	(b) 6-20	(c) 21-50	(d) 51-100	(8) ILLUSTRATION (a) FIG NO	(b) ITEM NO
X1 00461		CLIP, GUIDE: LATCH ROD (97403) 13200E9170	EA		2					13	23
X1 00462		LOCK, DOOR (97403) 13200E9066	EA		1					13	11
X1 00463		ROD, LATCH (97403) 13200E9069-2	EA		2					13	25
X1 00464		SHIM, LATCH ROD: 0.125 IN. THK (97403) 13200E9067-1	EA		2					13	24
X20 00465		PANEL: EXTERIOR, SIDE DOOR (97403) 13200E9071-3	EA		1						
X20 00466		PANEL: INTERIOR, SIDE DOOR (97403) 13200E9070-3	EA		1						
0 00467	5320-268-4769	RIVET, BLIND: HINGE TO BODY, DOOR LOCK MTG (96906) MS20600AD6-3	EA		12	*	*	*	*	13	8
0 00468	5320-117-6092	RIVET, BLIND: HINGE TO DOOR (96906) MS20706AD6-7	EA		18	*	*	*	*	13	7
0 00469	5305-016-4809	SCREW, TAPPING, THREAD FORMING: LATCH ROD MTG (00000) 164809	EA		4	*	*	*	*	13	20
X20 00470		Z-BAR: DOOR (97403) 13200E9072-5	EA		1						
X20 00471		Z-BAR: DOOR (97403) 13200E9072-6	EA		1						
X20 00472		DOOR ASSEMBLY: FUEL ACCESS (97403) 13200E9143	EA		1						
X20 00473		CLIP, SPRING TENSION (76953) C36425050-4	EA		1					27	9
X20 00474		DOOR: FUEL ACCESS (97403) 13200E9144	EA		1					27	10
X20 00475		HINGE: FUEL ACCESS DOOR (97403) 13200E9145	EA		1					27	6

(1) SMR CODE / INDEX NO.	(2) FEDERAL STOCK NUMBER	(3) DESCRIPTION REFERENCE NO. & MFR. CODE — USABLE ON CODE	(4) UNIT OF ISSUE	(5) QTY INC IN UNIT PACK	(6) QTY INC IN UNIT	(7) 15-DAY ORGANIZATIONAL MAINTENANCE ALW (a) 3.5	(b) 6.28	(c) 21.90	(d) 51.100	(8) ILLUSTRATION (a) FIG NO.	(b) ITEM NO.
X20 00491		Z-BAR; DOOR (97403) 13200E9072-4	EA		1						
X20 00492	1240-856-7225	DOOR ASSEMBLY; TOP DOOR, LEFT SIDE (97403) 13200E9069-1	EA		2					20	1
X20 00493	2540-856-7257	HINGE, DOOR (97403) 13200E9073-1	EA		1					13	27
X20 00494	2540-856-7239	LOCK ASSEMBLY, DOOR (97403) 13200E9065-1	EA		1						
X1 00495		CLIP, GUIDE; LATCH ROD (97403) 13200E9170	EA		2					13	23
X1 00496		LOCK, DOOR (97403) 13200E9066	EA		1					13	10
X1 00497		ROD, LATCH (97403) 13200E9069-1	EA		2					13	13
X1 00498		SHIM, LATCH ROD; 0.125 IN. THK (97403) 13200E9067-1	EA		2					13	24
X20 00499		PANEL; EXTERIOR, SIDE DOOR (97403) 13200E9071-1	EA		1						
X20 00500		PANEL; INTERIOR, SIDE DOOR (97403) 13200E9070-1	EA		1						
0 00501	5320-288-4789	RIVET, BLIND; HINGE TO BODY, DOOR LOCK MTG (96906) MS20600AD6-3	EA		32	•	•	•	•	13	8
0 00502	5320-117-6852	RIVET, BLIND; HINGE TO DOOR MTG (96906) MS20470AD6-7	EA		22	•	•	•	•	13	7
0 00503	5305-016-4405	SCREW, TAPPING, THREAD FORMING; LATCH ROD MTG (00000) 164405	EA		8	•	•	•	•	13	20
X20 00504		Z-BAR; DOOR (97403) 13200E9072-1	EA		1						
X20 00505		Z-BAR; DOOR (97403) 13200E9072-2	EA		1						

(1) SMR CODE — SHEET NO.	(2) FEDERAL STOCK NUMBER	(3) DESCRIPTION — REFERENCE NO. & MFR. CODE — USABLE ON CODE	(4) UNIT OF ISSUE	(5) QTY INC IN UNIT PACK	(6) QTY INC IN UNIT	(7) 15-DAY ORGANIZATIONAL MAINTENANCE A/V (a) 1-5	(b) 6-20	(c) 21-50	(d) 51-100	(8) ILLUSTRATION (a) FIG NO	(b) ITEM NO
X20 00582		BRACKET, ACETYLENE TANK (97403) 13200E5042	EA		1					10	13
X20 00583		BRACKET, DRILL (97403) 13200E5099	EA		1					10	29
X20 00584		BRACKET, DRILL GUIDE (97403) 13200E5125	EA		1					10	30
X20 00585		BRACKET, HANGER (97403) 13200E5061	EA		1					10	26
X20 00586		BRACKET, WELDING ROD HOLDER (97403) 13200E5107	EA		9					10	34
X20 00594		CLIP, GRINDER AND DRILL RETAINER (97403) 13200E5122	EA		2					10	35
X20 00595		CLIP, RETAINING (97403) 13200E5120	EA		1						
X20 00596		CLIP, RETAINING: WELDING EQUIPMENT (97403) 13200E5118	EA		3					10	4
X20 00597		CLIP, RETAINING: WELDING EQUIPMENT (97403) 13200E5121	EA		2					10	8
X20 00598		CONTAINER: FITTINGS (97403) 13200E5126	EA		2					10	12
X20 00599		CONTAINER: GRINDING DISC (97403) 13200E5115	EA		1					10	3
X20 00601	5340-856-7259	DOOR ASSEMBLY: FRONT PANEL, RIGHT SIDE (97403) 13200E5064-2	EA		1					20	2
X20 00602	5340-856-7235	HINGE, DOOR (97403) 13200E5073-3	EA		1					13	4
X20 00603	5340-856-7261	LOCK ASSEMBLY, DOOR (97403) 13200E5065-3	EA		1						
X1 00604		CLIP, GUIDE: LATCH ROD (97403) 13200E5130	EA		2					13	23

(1) SMR CODE / INDEX NO.	(2) FEDERAL STOCK NUMBER	(3) DESCRIPTION / REFERENCE NO. & MFR. CODE / USABLE ON CODE	(4) UNIT OF ISSUE	(5) QTY INC IN UNIT PACK	(6) QTY INC IN UNIT	(7) 15-DAY ORGANIZATIONAL MAINTENANCE ALW (a) 1-5	(b) 6-20	(c) 21-50	(d) 51-100	(8) ILLUSTRATION (a) FIG NO.	(b) ITEM NO.
X1 00605		LOCK, DOOR (97403) 13200E9166	EA		1					13	11
X1 00606		ROD, LATCH (97403) 13200E9069-2	EA		2					13	25
X1 00607		SHIM, LATCH ROD: 0.125 IN. THK (97403) 13200E9067-1	EA		2					13	24
X20 00608		PANEL: EXTERIOR, SIDE DOOR (97403) 13200E9071-3	EA		1						
X20 00609		PANEL: INTERIOR, SIDE DOOR (97403) 13200E9070-3	EA		1						
0 00610	5320-117-6852	RIVET, BLIND: HINGE TO DOOR (96906) MS20470AD6-7	EA		18	•	•	•	•	13	7
0 00611	5320-286-4789	RIVET, BLIND: HINGE TO BODY AND DOOR LOCK MTG (96906) MS20600AD6-3	EA		12	•	•	•	•	13	8
0 00612	5305-016-4405	SCREW, TAPPING, THREAD FORMING: LATCH DOOR ROD (00000) 164405	EA		4	•	•	•	•	13	20
X20 00613		Z-BAR: DOOR (97403) 13200E9072-5	EA		1						
X20 00614		Z-BAR: DOOR (97403) 13200E9072-6	EA		1						
X20 00615		DOOR ASSEMBLY: LOUVER, LEFT REAR (97403) 13200E9003	EA		1					20	3
X20 00616	2540-896-7262	HINGE, DOOR (97403) 13200E9073-2	EA		1					13	28
X20 00617	2540-896-7258	LOCK ASSEMBLY, DOOR (97403) 13200E9065-2	EA		1						
X1 00618		CLIP, GUIDE: LATCH ROD (97403) 13200E9170	EA		2					13	23
X1 00619		LOCK, DOOR (97403) 13200E9066	EA		1					13	10

(1) SMR CODE / INDEX NO.	(2) FEDERAL STOCK NUMBER	(3) DESCRIPTION — REFERENCE NO. & MFR. CODE — USABLE ON CODE	(4) UNIT OF ISSUE	(5) QTY INC IN UNIT PACK	(6) QTY INC IN UNIT	(7) 15-DAY ORGANIZATIONAL MAINTENANCE ALW (a) 1-5	(b) 6-20	(c) 21-50	(d) 51-100	(8) ILLUSTRATION (a) FIG NO.	(b) ITEM NO.
X1 00634		ROD, LATCH (97403) 13200E9069-1	EA		2					13	13
X1 00635		SHIM, LATCH ROD: 0.125 IN. THK (97403) 13200E9067-1	EA		2					13	24
X20 00636		PANEL: EXTERIOR, SIDE DOOR (97403) 13200E9071-1	EA		1						
X20 00637		PANEL: INTERIOR, SIDE DOOR (97403) 13200E9070-1	EA		1						
0 00638	5320-286-4789	RIVET, BLIND: HINGE TO BODY, AND DOOR LOCK MTG (96906) MS20600AD6-3	EA		32	•	•	•	•	13	8
0 00639	5320-117-6852	RIVET, BLIND: HINGE TO DOOR MTG (96906) MS20470AD6-7	EA		22	•	•	•	•	13	7
0 00640	5305-016-4405	SCREW, TAPPING, THREAD FORMING: LATCH ROD MTG (00000) 164405	EA		8	•	•	•	•	13	20
X20 00641		Z-BAR: DOOR (97403) 13200E9072-1	EA		1						
X20 00642		Z-BAR: DOOR (97403) 13200E9072-2	EA		1						
X20 00645		HANGER ASSEMBLY: WELDING HOSE (97403) 13200E9047	EA		1						
X20 00646		BRACKET: WELDING HOSE HANGER (97403) 13200E9050	EA		1					10	9
X1 00647		CHANNEL: WELDING HOSE HANGER (97403) 13200E9048	EA		1						
X20 00648		PLATE: WELDING HOSE BRACKET (97403) 13200E9049	EA		1					10	10
0 00649	5320-117-6854	RIVET, SOLID: PLATE TO CHANNEL (96906) MS20470AD6-9	EA		2	•	•	•	•	10	11
X20 00651	4940-888-2891	GUIDE, CYLINDER RETAINER (97403) 13200E9101-1	EA		1					10	17

(1) SMR CODE / INDEX NO.	(2) FEDERAL STOCK NUMBER	(3) DESCRIPTION REFERENCE NO. & MFR. CODE — USABLE ON CODE	(4) UNIT OF ISSUE	(5) QTY INC IN UNIT PACK	(6) QTY INC IN UNIT	(7) 15-DAY ORGANIZATIONAL MAINTENANCE ALW (a) 1-5	(b) 6-20	(c) 21-50	(d) 51-100	(8) ILLUSTRATION (a) FIG NO.	(b) ITEM NO.
X1 00704		LOCK, DOOR (97403) 13200E9066	EA		1					17	11
X1 00705	5340-062-8676	PLATE: DOOR LOCK (97403) 13200E9067-2	EA		2					17	16
X1 00706		PLATE, LATCH ROD (97403) 13200E9067-1	EA		2					17	15
X1 00707		ROD, LATCH (97403) 13200E9069-1	EA		2					17	18
X1 00708		ROD, LATCH (97403) 13200E9069-3	EA		2					17	19
X20 00709		PANEL: REAR DOOR, EXTERIOR (97403) 13200E9090	EA		1						
X20 00710		PANEL: REAR DOOR, EXTERIOR (97403) 13200E9232	EA		1						
X20 00711		PANEL: REAR DOOR, INTERIOR (97403) 13200E9229	EA		1						
X20 00712		PANEL: REAR DOOR, INTERIOR (97403) 13200E9231	EA		1						
0 00713	5305-016-4359	SCREW, TAPPING, THREAD FORMING: ACCESS PLATE MTG (00000) 164359	EA		8	•	•	•	•	10	20
0 00714	5305-016-4359	SCREW, TAPPING, THREAD FORMING: CELLAR WINDOW LOCK MOUNTING (00000) 164359	EA		8	•	•	•	•	17	14
X20 00715		SUPPORT: DOOR TO BODY (97403) 13200E9018 (USED ON DOOR ASSEMBLY, STOCK NO. (97403) 13200E9228-2 ONLY)	EA		1					11	5
X20 00716		SUPPORT: DOOR TO BODY (97403) 13200E9233 (USED ON DOOR ASSEMBLY, STOCK NO. (97403) 13200E9228-1 ONLY)	EA		1					10	40

(1) SMR CODE / INDEX NO.	(2) FEDERAL STOCK NUMBER	(3) DESCRIPTION REFERENCE NO. & MFR. CODE — USABLE ON CODE	(4) UNIT OF ISSUE	(5) QTY INC IN UNIT PACK	(6) QTY INC IN UNIT	(7) 15-DAY ORGANIZATIONAL MAINTENANCE ALW (a) 1-5	(b) 6-20	(c) 21-50	(d) 51-100	(8) ILLUSTRATION (a) FIG NO.	(b) ITEM NO.
0 00742	5310-809-4061	WASHER, FLAT: TAILGATE LATCH (96906) MS27183-15	EA		2	•	•	•	•	12	22
0 00743	5310-761-6882	NUT, PLAIN, HEXAGON: BLOCK STG (96906) MS51967-2	EA		4	•	•	•	•	21	5
0 00744	5310-298-2747	NUT, PLAIN, HEXAGON: BRACE ASSEMBLY MTG (96906) MS20500-428	EA		16	•	•	•	•	13	17
0 00745	5310-761-6882	NUT, PLAIN, HEXAGON: CHAIN BRACKET TO BODY (96906) MS51967-2	EA		4	•	•	•	•	12	20
00746	5310-761-6882	NUT, PLAIN, HEXAGON: OXYGEN RACK (96906) MS51967-2	EA		9	•	•	•	•	16	1
0 00748	5310-732-0558	NUT, PLAIN, HEXAGON: RETAINER TO BRACKET (96906) MS51967-8	EA		2	•	•	•	•	10	19
0 00750	5310-761-6882	NUT, PLAIN, HEXAGON: TAILGATE HINGE AND LATCH TO BODY (96906) MS51967-2	EA		16	•	•	•	•		
0 00751	5310-685-1429	NUT, PLAIN, HEXAGON: VISE TO TAILGATE (96906) MS51967-14	EA		3	•	•	•	•	12	1
0 00753	5310-888-2878	NUT, SHEET SPRING: OXYGEN CYLINDER PLATE TO BODY (94222) 17-10015-14	EA		2	•	•	•	•	16	7
X20 00764	4940-993-4211	PANEL ASSEMBLY, HINGED, ROOF (97403) 13200E9205	EA		1					17	1
X20 00771		PLATE: CYLINDER RETAINER (97403) 13200E9097	EA		1						
X20 00772		RACK ASSEMBLY: OXYGEN CYLINDER (97403) 13200E9242	EA		1					16	3
X20 00773		CHANNEL, BODY ASSEMBLY: FRONT (97403) 13200E9251	EA		1					19	9
X20 00774	5340-093-5964	LOOP, STRAP FASTENER (00000) 8328423	EA		2					16	4
X20 00775		PLATE: OXYGEN CYLINDER RACK (97403) 13200E9242	EA		1						

(1) SMR CODE / INDEX NO.	(2) FEDERAL STOCK NUMBER	(3) DESCRIPTION — REFERENCE NO. & MFR. CODE — USABLE ON CODE	(4) UNIT OF ISSUE	(5) QTY INC IN UNIT PACK	(6) QTY INC IN UNIT	(7) 15-DAY ORGANIZATIONAL MAINTENANCE ALW (a) 1-5	(b) 6-20	(c) 21-50	(d) 51-100	(8) ILLUSTRATION (a) FIG NO.	(b) ITEM NO.
0 00796	5320-117-7287	RIVET, SOLID: HINGE TO ACCESS PLATE AND FLOOR (96906) MS20426AD6-7	EA		8	•	•	•	•	21	17
0 00796	5320-117-6937	RIVET, SOLID: SHEET SPRING NUT MTG (96906) MS20426AD3-3	EA		4	•	•	•	•		
0 00801	5320-242-0314	RIVET, SOLID: TAILGATE HINGE TO BODY (96906) MS20470AD6-18	EA		12	•	•	•	•	12	14
0 00802	5305-068-0502	SCREW, CAP, HEXAGON HEAD: CHAIN BRACKET TO BODY (96906) MS90725-6	EA		2	•	•	•	•	12	19
0 00803	5305-225-3839	SCREW, CAP, HEXAGON HEAD: CHAIN BRACKET TO BODY (96906) MS90725-8	EA		2	•	•	•	•	12	18
0 00804	5305-269-3211	SCREW, CAP, HEXAGON HEAD: RETAINER TO BRACKET (96906) MS90725-60	EA		2	•	•	•	•	10	16
0 00805	5305-050-1077	SCREW, CAP, HEXAGON HEAD: VISE TO TAILGATE (96906) MS90725-118	EA		3	•	•	•	•	12	6
0 00806	5305-012-0697	SCREW, MACHINE: BRACE ASSEMBLY MTG (96906) MS35241-88	EA		16	•	•	•	•	13	9
0 00807	5305-012-0697	SCREW, MACHINE: OXYGEN RACK MTG (96906) MS35241-88	EA		9	•	•	•	•	16	13
0 00810	5305-012-0697	SCREW, MACHINE: TAILGATE LATCH TO BODY (96906) MS35241-88	EA		4	•	•	•	•	12	24
0 00811	5305-888-2879	SCREW, PANEL FASTENER: ACCESS PLATE TO FLOOR (94222) 17-11-206-12	EA		2	•	•	•	•	21	14
0 00812	5305-888-2879	SCREW, PANEL FASTENER: OXYGEN CYLINDER ACCESS PLATE (94222) 17-11-206-12	EA		2	•	•	•	•	16	10
0 00813	5305-057-9612	SCREW, TAPPING, THREAD FORMING: CLIP MTG (96906) MS24621-30	EA		8	•	•	•	•	13	1
0 00814	5305-052-6920	SCREW, TAPPING, THREAD FORMING: FRONT DOORS, RIGHT AND LEFT SIDE WEATHER STRIP AND HOLDING MTG (96906) MS24629-56	EA		94	•	•	•	•	13	6

(1) SMR CODE / INDEX NO.	(2) FEDERAL STOCK NUMBER	(3) DESCRIPTION / REFERENCE NO. & MFR. CODE / USABLE ON CODE	(4) UNIT OF ISSUE	(5) QTY INC IN UNIT PACK	(6) QTY INC IN UNIT	(7) 15-DAY ORGANIZATIONAL MAINTENANCE ALW (a) 1-5	(b) 6-20	(c) 21-50	(d) 51-100	(8) ILLUSTRATION (a) FIG NO.	(b) ITEM NO.
0 00829	5306-057-2507	BOLT, SQUARE NECK: HINGE TO TAILGATE (96906) MS35751-21	EA		6	•	•	•	•	12	29
X20 00830		COVER, CHAIN (97403) 13200E9226	EA		2					12	17
X20 00831		FRAME, TAILGATE (97403) 13200E9211	EA		1					12	8
X20 00832		HINGE, TAILGATE (97403) 13200E9214	EA		2					12	13
0 00833	5310-761-6882	NUT, PLAIN, SQUARE: CHAIN BRACKET AND FRAME MTG (96906) MS51967-2	EA		22	•	•	•	•	12	11
0 00834	5315-839-5822	PIN, COTTER: HINGE PIN (96906) MS24665-353	EA		2	•	•	•	•	12	12
X20 00835		PIN, HINGE: TAILGATE, 1/2 IN. DIA, 5 IN. LG HEADED (97403) 13200E9227	EA		2					12	15
0 00836	5305-016-4359	SCREW, TAPPING, THREAD FORMING: STRIP TO FRAME (00000) 164359	EA		9	•	•	•	•	12	30
M O 00837		SKIN, TAILGATE	EA		1					12	4
P O 00838	9535-233-1860	MANUFACTURE FROM: ALUMINUM ALLOY SHEET (15 1/2 IN. W, 4 FT, 4 1/2 IN. LG REQUIRED)	SH			SEE GMP 9501					
X20 00839		STRAP, TAILGATE (97403) 13200E9225	EA		2					12	9
X20 00840		STRIP, TOP: TAILGATE (97403) 13200E9253	EA		1					12	7
0 00841		WASHER, FLAT: GRYDEN RACK MTG (96906) MS27183-10	EA		9	•	•	•	•	16	12
0 00842	5310-809-5998	WASHER, FLAT: VISE MTG (96906) MS27183-18	EA		3	•	•	•	•	12	5

(1) SMR CODE / INDEX NO.	(2) FEDERAL STOCK NUMBER	(3) DESCRIPTION / REFERENCE NO. & MFR. CODE / USABLE ON CODE	(4) UNIT OF ISSUE	(5) QTY INC IN UNIT PACK	(6) QTY INC IN UNIT	(7) 15-DAY ORGANIZATIONAL MAINTENANCE ALW (a) 1-5	(b) 6-20	(c) 21-50	(d) 51-100	(8) ILLUSTRATION (a) FIG NO.	(b) ITEM NO.
X1 00620		ROD, LATCH (97403) 13200E9078	EA		2					13	14
X1 00621		SHIM, LATCH ROD: 0.125 IN. THK (97403) 13200E9067-1	EA		2					13	24
X20 00622		PANEL: EXTERIOR, SIDE DOOR (97403) 13200E9071-2	EA		1						
X20 00623		PANEL: INTERIOR, SIDE DOOR (97403) 13200E9015	EA		1						
0 00624	5320-582-3268	RIVET, BLIND: HINGE TO BODY AND DOOR LOCK MTG (96906) MS20600AD6-3	EA		23	•	•	•	•	13	8
0 00625	5320-117-6852	RIVET, BLIND: HINGE TO DOOR (96906) MS20470AD6-7	EA		17	•	•	•	•	13	7
0 00626	5305-016-4405	SCREW, TAPPING, THREAD FORMING: LATCH ROD GUIDE MOUNTING (00000) 163405	EA		4	•	•	•	•	13	20
X20 00627		Z-BAR: DOOR (97403) 13200E9072-3	EA		1						
X20 00628		Z-BAR: DOOR (97403) 13200E9072-4	EA		1						
X20 00629	1940-896-7225	DOOR ASSEMBLY: TOP DOOR, RIGHT SIDE (97403) 13200E9064-1	EA		2					20	1
X20 00630	2540-896-7257	HINGE, DOOR (97403) 13200E9073-1	EA		1					13	27
X20 00631	2540-896-7239	LOCK ASSEMBLY, DOOR (97403) 13200E9065-1	EA		1						
X1 00632		CLIP, GUIDE: LATCH ROD (97403) 13200E9170	EA		2					13	23
X1 00633		LOCK, DOOR (97403) 13200E9066	EA		1					13	10

(1) SMR CODE / INDEX NO.	(2) FEDERAL STOCK NUMBER	(3) DESCRIPTION / REFERENCE NO. & MFR. CODE / USABLE ON CODE	(4) UNIT OF ISSUE	(5) QTY INC IN UNIT PACK	(6) QTY INC IN UNIT	(7) 15-DAY ORGANIZATIONAL MAINTENANCE ALW (a) 1-5	(b) 6-20	(c) 21-50	(d) 51-100	(8) ILLUSTRATION (a) FIG NO.	(b) ITEM NO.
X20 00692	4940-885-2892	GUIDE, CYLINDER RETAINER (97403) 13200E9101-2	EA		1					10	15
X20 00695	5340-093-5564	LOOP, STRAP-FASTENER: GREASE GUN (00000) 8328423	EA		22					10	24
X20 00696	5340-093-5564	LOOP, STRAP-FASTENER: TOOL CHEST RETAINING (00000) 8328423	EA		2					11	24
X20 00669		PLATE, ACCESS: RIGHT REAR SPRING SHACKLE (97403) 13200E0987	EA		1					10	23
X20 00675	4940-896-7260	SEAL, HINGE: RIGHT SIDE (97403) 13200E9125-2	EA		4					13	3
X20 00687	5340-633-7334	STRAP: AIR COMPRESSOR AND TOOL BOX MTG (00000) 592639	EA		4					42	9
X20 00688	5340-505-6393	STRAP, WEBBING: FLARING TOOL KIT (00000) 592637	EA		1					42	10
X20 00689	5340-613-2987	STRAP, WEBBING: GREASE AND OIL SUCTION GUN MTG (00000) 592638	EA		2					42	8
X20 00690	5340-506-1511	STRAP, WEBBING: HEAVY DUTY SOCKET SET MTG (00000) 592640	EA		2					42	7
X20 00699	4940-888-2895	DOOR ASSEMBLY: LEFT REAR (97403) 13200E9226-2 (SAME AS DOOR ASSEMBLY, STOCK NO. 4940-896-7226, EXCEPT WHERE INDIVIDUAL COMPONENTS ARE ANNOTATED)	EA		1					17	20
X20 00700	4940-896-7226	DOOR ASSEMBLY: RIGHT REAR (97403) 13200E9226-1	EA		1					17	9
X20 00701	4940-961-9098	BOLT, CELLAR WINDOW: DOOR TO TAILGATE LOCK (72968) 1403J	EA		2					17	13
X20 00702	2540-896-7223	HINGE, DOOR (97403) 13200E9073-5	EA		2					17	8
X20 00703	2540-896-7240	LOCK ASSEMBLY, DOOR (97403) 13200E9069-4	EA		2					17	10

(1) SMR CODE / INDEX NO.	(2) FEDERAL STOCK NUMBER	(3) DESCRIPTION REFERENCE NO. & MFR. CODE — USABLE ON CODE	(4) UNIT OF ISSUE	(5) QTY INC IN UNIT PACK	(6) QTY INC IN UNIT	(7) 15 DAY ORGANIZATIONAL MAINTENANCE ALW (a) 1-5	(b) 6-20	(c) 21-50	(d) 51-100	(8) ILLUSTRATION (a) FIG NO.	(b) ITEM NO.
X20 00726		HINGE: ACCESS PLATE (97403) 13200E9195	EA		4					21	18
X20 00727		PLATE, ACCESS, HINGED: LIFTING HOOKS (97403) 13200E9192	EA		2					21	15
X20 00728		PLATE, INSPECTION: FUEL BABE DEMISING ELEMENT (97403) 13200E9191	EA		1					21	20
X20 00729		SPACER: HINGE TO ACCESS DOOR (97403) 13200E9010	EA		8					21	19
M 0 00732		GASKET: ACCESS PLATE, LEFT AND RIGHT FRONT	EA		2					10	22
		MANUFACTURE FROM:									
P 0 00733	5330-202-4061	RUBBER SHEET, SOLID	FT			SEE GAP 9501					
		(6 IN. BY 6 IN. REQUIRED FOR EACH GASKET)									
M 0 00734		GASKET: LEFT AND RIGHT REAR ACCESS PLATES	EA		2					10	37
		MANUFACTURE FROM:									
P 0 00735	5330-202-4061	RUBBER SHEET, SOLID	FT			SEE GAP 9501					
		(10 IN. BY 8 IN. REQUIRED FOR EACH GASKET)									
X20 00737		LATCH ASSEMBLY: TAILGATE (97403) 13200E9236	EA		2						
X1 00738		BRACKET, LATCH: TAILGATE (97403) 13200E9241	EA		2					12	25
X20 00739		LATCH, TAILGATE (97403) 13200E9237	EA		2					12	26
0 00740	5315-082-3044	PIN, COTTER: TAILGATE LATCH (96906) MS24665-283	EA		2	•	•	•	•	12	23
X20 00741		SPRING, LATCH: TAILGATE (97403) 13200E9240	EA		2					12	21

(1) SMR CODE / INDEX NO.	(2) FEDERAL STOCK NUMBER	(3) DESCRIPTION REFERENCE NO. & MFR. CODE — USABLE ON CODE	(4) UNIT OF ISSUE	(5) QTY INC. IN UNIT PACK	(6) QTY INC. IN UNIT	(7) 15-DAY ORGANIZATIONAL MAINTENANCE ALW (a) 1-5	(b) 6-20	(c) 21-50	(d) 51-100	(8) ILLUSTRATION (a) FIG NO.	(b) ITEM NO.
X20 00776		PLATE: OXYGEN CYLINDER RETAINER (97403) 13200E9027	EA		1					16	9
0 00777	5320-117-6056	RIVET, SOLID: STRAP FASTENER LOOP MTG (00000) SEE 147	EA		4	•	•	•	•	16	5
X20 00778		STRAP: OXYGEN TANK MTG (97403) 13200E9095	EA		2					16	14
X20 00779	4940-804-1349	RECEPTACLE, BODY OUTLET: TRUCK BODY (75382) 5204	EA		2						
X20 00780		PLATE AND CAP (75382) 2701	EA		2						
X20 00781		RECEPTACLE (75382) 5015	EA		2						
X20 00782		RETAINER: ACETYLENE CYLINDER (97403) 13200E9112	EA		1					10	14
0 00783	5320-117-6052	RIVET, BLIND: DOOR HINGE MTG (96906) MS20470AD6-7	EA		66	•	•	•	•	17	7
0 00784	5320-582-3268	RIVET, BLIND: DOOR LOCK MTG (96906) MS20600AD6-3	EA		10	•	•	•	•	17	12
0 00785	5320-646-7906	RIVET, BLIND: PLATE, CATCH, REAR DOOR STOP AND HOOK CLAMP MTG (94222) 38-206-06-13	EA		32	•	•	•	•	11	2
0 00786	5320-582-3268	RIVET, BLIND: SUPPORT TO BODY (96906) MS20600AD6-3	EA		22	•	•	•	•	10	39
0 00787	5320-117-6582	RIVET, SOLID: ACETYLENE CYLINDER BRACKET, WELDING HOSE BRACKET RETAINER GUIDES MTG (96906) MS20470AD6-7	EA		98	•	•	•	•	10	1
0 00788	5320-117-6582	RIVET, SOLID: CATCH MTG (96906) MS20470AD6-7	EA		4	•	•	•	•	16	6
0 00795	5320-117-6582	RIVET, SOLID: FLOOD LIGHT BRACKET MTG (96906) MS20470AD6-7	EA		18	•	•	•	•	11	4

(1) SMR CODE / INDEX NO.	(2) FEDERAL STOCK NUMBER	(3) DESCRIPTION / REFERENCE NO. & MFR. CODE / USABLE ON CODE	(4) UNIT OF ISSUE	(5) QTY INC IN UNIT PACK	(6) QTY INC IN UNIT	(7) 15-DAY ORGANIZATIONAL MAINTENANCE ALR (a) 1-5	(b) 6-20	(c) 21-50	(d) 51-100	(8) ILLUSTRATION (a) FIG. NO.	(b) ITEM NO.
0 00815	5305-052-6921	SCREW, TAPPING, THREAD FORMING: INSPECTION PLATE TO FLOOR (96906) MS24629-57	EA		6	•	•	•	•	21	21
0 00816	5305-053-0365	SCREW, TAPPING, THREAD FORMING: LATCH ROD GUIDE MTG (96906) MS24629-38	EA		8	•	•	•	•	17	17
X20 00817		STOP: DRIVER CYLINDER RETAINER (97403) 13200E9091	EA		1					16	11
X20 00818		STOP: REAR DOOR (97403) 13200E9054	EA		2					11	3
X20 00820		STRAP, WEBBING: W/BUCKLE AND END CLIP, 1 1/2 IN. W, 3 FT, 4 IN. LG (00000) 592562	EA		2						
X20 00821		TAILGATE ASSEMBLY (97403) 13200E9210	EA		1						
M 0 00822		BOARD, HARDWOOD: TAILGATE	EA		2					12	3
		MANUFACTURE FROM:									
P 0 00823	5510-255-9495	LUMBER, HARDWOOD (3 FT 2 3/8 IN. LG BY 7 9/16 IN. W, 1 IN. THK REQUIRED FOR EACH BOARD)	FT			SEE QMP 9501					
X20 00824		BRACKET AND CHAIN ASSEMBLY: TAILGATE (97403) 13200E9217	EA		2						
X1 00825		BRACKET (97403) 13200E9221	EA		4					12	31
X1 00826	4010-839-7756	CHAIN (00000) N2C1444S	EA		2					12	16
0 00827	5306-054-8010	BOLT, SQUARE NECK: BOARD TO FRAME (96906) MS35751-19	EA		10	•	•	•	•	12	27
0 00828	5306-057-2506	BOLT, SQUARE NECK: CHAIN, BRACKET AND HINGE TO TAILGATE (96906) MS35751-20	EA		6	•	•	•	•	12	28

(1) SMR CODE / INDEX NO.	(2) FEDERAL STOCK NUMBER	(3) DESCRIPTION — REFERENCE NO. & MFR. CODE — USABLE ON CODE	(4) UNIT OF ISSUE	(5) QTY INC IN UNIT PACK	(6) QTY INC IN UNIT	(7) 15-DAY ORGANIZATIONAL MAINTENANCE ALW (a) 1-5	(b) 6-20	(c) 21-50	(d) 51-100	(8) ILLUSTRATION (a) FIG NO	(b) ITEM NO
0 00843	5310-582-5965	WASHER, LOCK: BRACE ASSEMBLY MTG (96906) MS35338-44	EA		16	•	•	•	•	13	18
0 00844	5310-543-2705	WASHER, LOCK: BLOCK MTG (96906) MS35338-25	EA		4	•	•	•	•	21	4
0 00845	5310-543-2705	WASHER, LOCK: CHAIN BRACKET TO BODY (96906) MS35338-25	EA		4	•	•	•	•	12	10
0 00846	5310-582-5965	WASHER, LOCK: OXYGEN RACK MTG (96906) MS35338-44	EA		9	•	•	•	•	16	2
0 00848	5310-637-9541	WASHER, LOCK: RETAINER TO BRACKET (96906) MS35338-46	EA		2	•	•	•	•	10	18
0 00850	5310-543-2705	WASHER, LOCK: TAILGATE STRAP, BRACKET AND FRAME (96906) MS35338-25	EA		22	•	•	•	•	12	10
0 00851	5310-584-5272	WASHER, LOCK: VISE TO TAILGATE (96906) MS35338-48	EA		3	•	•	•	•	12	2
0 00852	5310-024-2206	WASHER, PANEL FASTENER SCREW: ACCESS DOOR (94222) 17-10014-11	EA		2	•	•	•	•	21	16
0 00854	5310-013-4530	NUT, PLAIN, HEXAGON: RETAINER CLIP MTG (96906) MS35649-62	EA		15	•	•	•	•	10	31
X20 00855	4940-062-8676	PLATE: DOOR BRACE (97403) 13200E9067-2	EA		8					17	16
0 00856	5320-117-6939	RIVET, SOLID: DOOR BRACE PLATE MTG (96906) MS20426AD3-5	EA		16	•	•	•	•	10	25
0 00857	5320-117-6852	RIVET, SOLID: LOOP MTG (96906) MS20470AD6-7	EA		2	•	•	•	•	11	23
0 00858	5320-117-7287	RIVET, SOLID: LOOP MTG (96906) MS20426AD6-7	EA		48	•	•	•	•	10	38
0 00860	5305-043-6663	SCREW, MACHINE: RETAINER CLIP MTG (96906) MS35225-28	EA		15	•	•	•	•	10	5
X20 00861		SHIM: DOOR BRACE (97403) 13200E9067-1	EA		8					10	27

(1) SMR CODE / INDEX NO.	(2) FEDERAL STOCK NUMBER	(3) DESCRIPTION REFERENCE NO. & MFR. CODE — USABLE ON CODE	(4) UNIT OF ISSUE	(5) QTY INC IN UNIT PACK	(6) QTY INC IN UNIT	(7) 15-DAY ORGANIZATIONAL MAINTENANCE ALW (a) 1-5	(b) 6-20	(c) 21-50	(d) 51-100	(8) ILLUSTRATION (a) FIG NO.	(b) ITEM NO.
G 00864	5310-596-7674	WASHER, LOCK: RETAINER CLIP MTG (96906) MS35338-22	EA		15	•	•	•	•	10	36
0 00865	5310-024-2206	WASHER, PANEL FASTENER SCREW: OXYGEN CYLINDER ACCESS PLATE (94222) 17-10014-11	EA		2	•	•	•	•	16	8
00868		GROUP 20 - POWER TAKE-OFF									
00869		2004 - POWER TAKE-OFF ASSEMBLY									
X20 00889		GUARD ASSEMBLY: POWER DIVIDER (97403) 13200E0967	EA		1						
X20 00890		DOOR, ACCESS: GUARD (97403) 13200E0969	EA		1					23	8
X1 00891		GUARD (97403) 13200E0968	EA		1					23	7
X20 00892		HINGE, DOOR (97403) 13200E0970	EA		1					23	6
0 00893	5310-888-2878	NUT, SHEET SPRING: SCREW FASTENER (94222) 17-10015-14	EA		1	•	•	•	•	23	2
X20 00894		PLATE: DOOR STOP (97403) 13200E0971	EA		1					23	3
0 00895	5320-117-6951	RIVET, SOLID: SHEET SPRING NUT MTG AND REINFORCING STRIP AND HINGE MTG, 1/8 IN. DIA, 7/16 IN. LG (96906) MS20426AD4-8	EA		19	•	•	•	•	23	4
0 00896	5305-441-0236	SCREW, PANEL FASTENER: ACCESS DOOR (94222) 17-11-206-11	EA		1	•	•	•	•	23	10
M 0 00897		STRIP, REINFORCING	EA		2					23	5
		MANUFACTURE FROM:									
P 0 00898	9515-267-1119	ALUMINUM STRIP, COLD ROLLED	FT			SEE GRP 9501					
		(30 IN. REQUIRED FOR EACH STRIP)									

(1) SMR CODE / INDEX NO.	(2) FEDERAL STOCK NUMBER	(3) DESCRIPTION REFERENCE NO. & MFR. CODE / USABLE ON CODE	(4) UNIT OF ISSUE	(5) QTY INC IN UNIT PACK	(6) QTY INC IN UNIT	(7) 15-DAY ORGANIZATIONAL MAINTENANCE ALW (a) 1-5	(b) 6-20	(c) 21-50	(d) 51-100	(8) ILLUSTRATION (a) FIG NO.	(b) ITEM NO.
X20 00927		SUPPORT: BELLCRANK (16004) 33960 B	EA		1					43	16
0 00928	5310-809-5997	WASHER, FLAT: BELLCRANK TO SUPPORT (96906) MS27183-17 B	EA		1	•	•	•	•	43	21
0 00929	5310-080-6004	WASHER, FLAT: SUPPORT MTG (96906) MS27183-14 B	EA		2	•	•	•	•	43	14
0 00930	5310-637-9541	WASHER, LOCK: SUPPORT MTG (96906) MS35338-46 B	EA		1	•	•	•	•	43	15
0 00953	4730-050-4207	FITTING, LUBRICATION: PILLOW BLOCK AND COLLAR (96906) MS15001-3	EA		4	•	•	•	•	30	10
X20 00975	4730-050-4208	FITTING, LUBRICATION: CLUTCH COLLAR (96906) MS15003-1 B	EA		2					30	10
X20 00976	4730-050-4205	FITTING, LUBRICATION: PILLOW BLOCK, 1/8-28 THD SIZE, 45 DEGREE (96906) MS15001-3 B	EA		1					30	10
0 00998	5310-768-0319	NUT, PLAIN, HEXAGON: UPPER LINKAGE ASSEMBLY MTG (96906) MS51968-2 A	EA		2	•	•	•	•	23	12
0 01003	5305-267-8979	SCREW, CAP, HEXAGON HEAD: UPPER LINKAGE ASSEMBLY MTG (96906) MS90726-13 A	EA		2	•	•	•	•	23	14
0 01004	5305-014-5207	SCREW, TAPPING, THREAD FORMING: GUARD MTG (00000) 142507	EA		7	•	•	•	•	23	11
0 01006		WASHER, FLAT: UPPER LINKAGE ASSEMBLY MTG (96906) MS27183-10 A	EA		2	•	•	•	•	23	13

(1) SMR CODE / INDEX NO.	(2) FEDERAL STOCK NUMBER	(3) DESCRIPTION / REFERENCE NO. & MFR. CODE / USABLE ON CODE	(4) UNIT OF ISSUE	(5) QTY INC IN UNIT PACK	(6) QTY INC IN UNIT	(7) 15-DAY ORGANIZATIONAL MAINTENANCE ALW (a) 1-5	(b) 6-20	(c) 21-50	(d) 51-100	(8) ILLUSTRATION (a) FIG NO.	(b) ITEM NO.
X20 01025	6115-025-3099	PLATE, INSTRUCTION: RHEOSTAT (28835) A891	EA		1						
X20 01026	3431-025-3097	PLATE, INSTRUCTION: RHEOSTAT (28835) AW579 B	EA		1						
X20 01027		PLATE, INSTRUCTION: THROTTLE (97403) 13200E0963 B	EA		1						
X20 01028		PLATE, INSTRUCTION: THROTTLE (16004) 31519 B	EA		1						
X20 01029		PLATE, NAME: GENERATOR CLUTCH SHIFT LINKAGE (16004) 33962 B	EA		1						
X20 01030	2990-246-9335	PLATE, NAME: GOVERNOR BODY (77260) X581	EA		1						
X20 01031		PLATE, NAME: OVERSPEED (28835) BW1571 B	EA		1						
X20 01032		PLATE, NAME: TWIN DISH (61208) A2018 A	EA		1						
X20 01033		PLATE, SWITCH (92666) BC158A B	EA		1						
0 01034		RIVET, BLIND: GENERATOR POINTER INSTRUCTION PLATE MTG, .203 DIA X .255 LG (98255) P05	EA		10	•	•	•	•		
0 01035	5305-067-9896	SCREW: OVERSPEED NAMEPLATE, SELF-TAPPING (96906) MS24621-55 B	EA		2	•	•	•	•		
0 01036	5305-840-5938	SCREW, DRIVE: RHEOSTAT NAMEPLATE AND INSTRUCTION PLATE MTG (96906) MS21318-19	EA		9	•	•	•	•		
0 01037	5305-011-3231	SCREW, DRIVE: TWIN DISH NAMEPLATE MTG (61208) 1333	EA		2	•	•	•	•		
0 01038	5305-855-0966	SCREW, TAPPING, THREAD CUTTING: DECLUTCHER INSTRUCTION PLATE MTG (96906) MS24629-39	EA		2	•	•	•	•		

(1) SMR CODE / INDEX NO.	(2) FEDERAL STOCK NUMBER	(3) DESCRIPTION / REFERENCE NO. & MFR. CODE / USABLE ON CODE	(4) UNIT OF ISSUE	(5) QTY INC IN UNIT PACK	(6) QTY INC IN UNIT	(7) 15-DAY ORGANIZATIONAL MAINTENANCE ALW (a) 1-5	(b) 6-20	(c) 21-50	(d) 51-100	(8) ILLUSTRATION (a) FIG NO.	(b) ITEM NO.
P 0 01056	5935-295-6403	CONNECTOR, RECEPTACLE, ELECTRICAL (00000) 7321299	EA		1	•	•	•	•	21	25
0 01057	5305-989-7435	SCREW, MACHINE: SLAVE RECEPTACLE MTG (96906) MS35207-264	EA		4	•	•	•	•	21	22
0 01058	5310-043-2226	WASHER, LOCK: SLAVE RECEPTACLE MTG (96906) MS35338-24	EA		4	•	•	•	•	21	23
01059		GROUP 44 - WELDING EQUIPMENT									
01060		4400 - ARC WELDER									
X20 01064		BOLT, EYE: GENERATOR LIFTING (28035) 6V3650 B	EA		1					44	31
X20 01065		BOLT, EYE: MAIN GENERATOR (28035) A3434 A	EA		1					34	10
X20 01069		NAMEPLATE: WELDER GENERATOR (28035) AM2398 B	EA		1	SEE GRP 2210					
0 01071	5305-895-1443	SCREW, TAPPING, THREAD FORMING: WELDER SERIAL NO. PLATE MTG (96906) MS24627-10 B	EA		4	SEE GRP 2210					
X20 01087		WASHER, LIFTING EYE: NONMETALLIC (28035) AM342 A	EA		1					34	9
01143		4403 - BRUSH HOLDER ASSEMBLY									
P 0 01151	5977-361-7769	BRUSH, ELECTRICAL CONTACT: DC (28035) DM625	EA		4	2	4	8	17	34	19
P 0 01152	5977-240-0381	BRUSH, ELECTRICAL CONTACT: EXCITER (28035) AAP16A	EA		4	2	4	8	17	34	20
P 0 01176	5977-695-2595	BRUSH, ELECTRICAL CONTACT: AC (28035) AM1470	EA		4	2	4	8	17	34	18

AT

(1) SMR CODE / INDEX NO.	(2) FEDERAL STOCK NUMBER	(3) DESCRIPTION / REFERENCE NO. & MFR. CODE	USABLE ON CODE	(4) UNIT OF ISSUE	(5) QTY INC IN UNIT PACK	(6) QTY INC IN UNIT	(7) 15-DAY ORGANIZATIONAL MAINTENANCE ALW (a) 1-5	(b) 6-20	(c) 21-50	(d) 51-100	(8) ILLUSTRATION (a) FIG NO.	(b) ITEM NO.
0 01259	5305-988-1171	SCREW, MACHINE: FILTER MTG (96906) MS35206-265		EA		4	•	•	•	•		
0 01260	5305-011-6286	SCREW, MACHINE: WRAPPER ASSY MTG (24617) 116286		EA		6	•	•	•	•	34	17
0 01261		SCREW, TAPPING, THREAD CUTTING: FAN GUARD MTG (96906) MS24629-21	A	EA		4	•	•	•	•	34	6
0 01262		WASHER, FLAT: FILTER MTG (96906) MS27183-10		EA		4	•	•	•	•	34	4
0 01263	5310-889-2528	WASHER, LOCK: FILTER MTG (96906) MS35504-68		EA		14	•	•	•	•	34	2
01264	3431-970-6254	WRAPPER ASSEMBLY (28835) 88W757		EA		2					34	16
01265		4407 - CONTROL PANELS HOUSING, CUBICLES										
X20 01297		BRACKET: LOOP CLAMP MTG (28835) 88W542	B	EA		5					45	11
X20 01304	5340-680-4402	CLAMP, LOOP: CAPACITOR BRACKET AND RESISTOR SWITCH (81074) EC6	B	EA		2					45	1
X20 01305		CLAMP, LOOP: RECEPTACLE WIRING (81074) EC8	B	EA		2					45	15
X20 01306	5340-289-7731	CLAMP, LOOP: WIRING (81074) EC10	B	EA		2					45	6
0 01325	5310-768-0319	NUT, PLAIN, HEXAGON: LOOP CLAMP BRACKET MTG (96906) MS51968-2	B	EA		2	•	•	•	•	45	7
0 01326	5310-012-0622	NUT, PLAIN, HEXAGON: LOOP CLAMP BRACKET MTG (96906) MS35649-82	B	EA		2	•	•	•	•	45	16
0 01327	5310-013-8530	NUT, PLAIN, HEXAGON: LOOP CLAMP MTG (96906) MS35649-62	B	EA		7	•	•	•	•	45	4
0 01328	5310-761-6882	NUT, PLAIN, HEXAGON: PANEL GROUNDING (96906) MS51967-2	B	EA		1	•	•	•	•	45	21

(1) SMR CODE / INDEX NO.	(2) FEDERAL STOCK NUMBER	(3) DESCRIPTION REFERENCE NO. & MFR. CODE	USABLE ON CODE	(4) UNIT OF ISSUE	(5) QTY INC IN UNIT PACK	(6) QTY INC IN UNIT	(7) 15-DAY ORGANIZATIONAL MAINTENANCE ALW (a) 1-5	(b) 6-20	(c) 21-50	(d) 51-100	(8) ILLUSTRATION (a) FIG NO.	(b) ITEM NO.
0 00899	5310-024-2206	WASHER, PANEL FASTENER SCREW (94222) 17-10014-11		EA		1	•	•	•	•	23	9
X20 00900		LINKAGE ASSEMBLY: UPPER, POWER DIVIDER (97403) 13200E0921	A	EA		1					23	1
X20 00914		LINKAGE ASSEMBLY: UPPER, POWER DIVIDER (16004) 33965	B	EA		1						
X20 00915		BELLCRANK (97403) 13200E0951	B	EA		1					43	17
X20 00916		BUSHING: PANEL (16004) 33963	B	EA		1					43	2
X20 00917	5340-989-0823	CLEVIS, ROD END (96906) MS35812-4	B	EA		1					43	6
X20 00918		KNOB: SHIFT LEVER (97403) 13200E9711	B	EA		1					43	1
0 00919	5310-732-0959	NUT, PLAIN, HEXAGON: CLEVIS LOCKING (96906) MS51968-8	B	EA		1	•	•	•	•	43	4
0 00920	5310-877-5795	NUT, SELF-LOCKING, HEXAGON: BELLCRANK TO SUPPORT (96906) MS21044N8	B	EA		1	•	•	•	•	43	20
0 00921	5315-839-5822	PIN, COTTER: CLEVIS PIN, 1/8 DIA. X 1 IN. LG	B	EA		2	•	•	•	•	43	5
0 00922	5315-815-3940	PIN, STRAIGHT, HEADED: CLEVIS (96906) MS35810-34	B	EA		2	•	•	•	•	43	7
X20 00923		PLATE, NAME: GENERATOR CLUTCH SHIFT LINKAGE (16004) 33962	B	EA		1	NEC GRP 2210					
X20 00924		ROD: BOOM TO CLEVIS (97403) 13200E0950	B	EA		2					43	3
0 00925	5305-269-3215	SCREW, CAP, HEXAGON HEAD: SUPPORT MTG (96906) MS90725-65	B	EA		1	•	•	•	•	43	22
0 00926	5305-879-3045	SCREW, TAPPING, THREAD FORMING: GENERATOR CLUTCH LINKAGE NAMEPLATE MTG (96906) MS24637-1	B	EA		2	NEC GRP 2210					

(1) SMR CODE / INDEX NO	(2) FEDERAL STOCK NUMBER	(3) DESCRIPTION — REFERENCE NO. & MFR. CODE — USABLE ON CODE	(4) UNIT OF ISSUE	(5) QTY INC IN UNIT PACK	(6) QTY INC IN UNIT	(7) 15-DAY ORGANIZATIONAL MAINTENANCE ALW (a) 1-5	(b) 6-20	(c) 21-50	(d) 51-100	(8) ILLUSTRATION (a) FIG NO	(b) ITEM NO
01008		GROUP 22 - BODY, CHASSIS OR HULL, AND ACCESSORY ITEMS									
01009		2202 - ACCESSORY ITEMS									
P O 01010	9905-205-2795	REFLECTOR, INDICATING, CLEARANCE: RED (96906) MS35307-1	EA		4	*	*	2	2	42	4
O 01011	5305-803-0633	SCREW, TAPPING, THREAD FORMING: REFLECTOR MTG (96906) MS24617-11	EA		8	*	*	*	*	42	3
01012		2210 - DATA PLATES									
X20 01014		NAMEPLATE: GREGORY (28035) 160A1400	EA		1						
X20 01015		NAMEPLATE: WELDER GENERATOR (28035) AME398	EA		1						
O 01016	5315-423-0038	PIN, DRIVE: NAME PLATE MTG (61208) 1333	EA		2	*	*	*	*		
O 01017	5315-423-3924	PIN, ESCUTCHEON: GOVERNOR NAMEPLATE MTG (77260) X955	EA		2	*	*	*	*		
X20 01018		PLATE, GROUNDING: CONTROL PANEL (16604) 33972 B	EA		1						
X20 01019	3010-360-4195	PLATE, IDENTIFICATION: CLUTCH (61208) A2012 B	EA		1						
X20 01021		PLATE, INSTRUCTION: DECLUTCHER (97403) 13200E0961	EA		1						
X20 01022		PLATE, INSTRUCTION: GENERATOR ENGAGING AND DISENGAGING (97403) 13200E0962	EA		1						
X20 01023	3010-317-6754	PLATE, INSTRUCTION: GOVERNOR OIL LEVER (77260) X1945	EA		1						
X20 01024		PLATE, INSTRUCTION: POINTER TO GENERATOR ENGAGING AND DISENGAGING (97403) 13200E0947 A	EA		1						

(1) SMR CODE / INDEX NO.	(2) FEDERAL STOCK NUMBER	(3) DESCRIPTION — REFERENCE NO. & MFR. CODE	USABLE ON CODE	(4) UNIT OF ISSUE	(5) QTY INC IN UNIT PACK	(6) QTY INC IN UNIT	(7) 15-DAY ORGANIZATIONAL MAINTENANCE ALW (a) 1-5	(b) 6-20	(c) 21-50	(d) 51-100	(8) ILLUSTRATION (a) FIG NO.	(b) ITEM NO.
0 01041	5305-879-3825	SCREW, TAPPING, THREAD FORMING: GENERATOR CLUTCH SHIFT LINKAGE NAMEPLATE MTG (96906) MS24637-1	B	EA		2	•	•	•	•		
0 01042	5305-879-3825	SCREW, TAPPING, THREAD FORMING: GROUNDING PLATE MTG (96906) MS24637-1	B	EA		2	•	•	•	•		
0 01043	5305-067-9896	SCREW, TAPPING, THREAD FORMING: THROTTLE INSTRUCTION PLATE MTG (96906) MS24621-55	B	EA		4	•	•	•	•		
0 01044	5305-855-1443	SCREW, APPING, THREAD FORMING: WELDER NAMEPLATE MTG (96906) MS24627-10		EA		4	•	•	•	•		
01045		GROUP 42 - ELECTRICAL EQUIPMENT										
01046		4216 - MISCELLANEOUS WIRING AND FITTINGS										
X20 01047		CABLE, ELECTRICAL: BATTERY CHARGING (00000) 7351202		EA		1					21	7
X20 01048	5940-501-8369	CLIP, TERMINAL (76545) 11C		EA		2					21	9
X20 01049	5935-258-9156	CONNECTOR, PLUG, ELECTRICAL: TWO MALE CONTACTS (00000) 7728882		EA		1					21	8
0 01050	5310-761-6882	NUT, PLAIN, HEXAGON: CLIP TO TERMINAL 1/4-20 THD SIZE (96906) MS51967-2		EA		2	•	•	•	•	21	11
0 01051	5305-988-1721	SCREW, MACHINE: CLIP TO TERMINAL (96906) MS35206-277		EA		2	•	•	•	•	21	13
0 01052	5940-812-5186	TERMINAL, LUG: STYLE 11, NO. 2 TO 1 AWG		EA		2	•	•	•	•	21	10
0 01053	5310-582-5965	WASHER, LOCK: CLIP TO TERMINAL (96906) MS35338-44		EA		2	•	•	•	•	21	12
0 01054	5310-877-5797	NUT, SELF-LOCKING HEXAGON: SLAVE RECEPTACLE MTG (96906) MS21044-N3		EA		4	•	•	•	•	21	24
P 0 01055	4940-745-7625	RECEPTACLE AND CABLE, BATTERY CHARGING: SLAVE (28835) 8BW1291		EA		1	•	•	•	•	21	1

(1) SMR CODE / INDEX NO	(2) FEDERAL STOCK NUMBER	(3) DESCRIPTION — REFERENCE NO. & MFR CODE / USABLE ON CODE	(4) UNIT OF ISSUE	(5) QTY INC IN UNIT PACK	(6) QTY INC IN UNIT	(7) 15-DAY ORGANIZATIONAL MAINTENANCE ALW (a) 1-5	(b) 6-20	(c) 21-50	(d) 51-100	(8) ILLUSTRATION (a) FIG NO.	(b) ITEM NO.
01207		4405 - FRAME SUPPORT, HOUSING, CARRIER									
0 01210	5306-225-8497	BOLT, MACHINE: COVER AND GUARD MTG	EA		3	•	•	•	•	34	30
0 01211	5306-225-8497	BOLT, MACHINE: COVER TO END BELL MTG	EA		3	•	•	•	•	34	15
X20 01227		COVER: GENERATOR A (28035) 8B4869	EA		1					34	8
X20 01230		GUARD, SHAFT A (28035) A2564	EA		1					34	29
0 01247	5310-012-0214	WASHER, LOCK: COVER AND GUARD MTG (96906) MS35338-26	EA		3	•	•	•	•	34	31
01250		4406 - VENTILATION, COOLING SYSTEM									
X20 01252	6115-887-8648	FILTER, AIR, GENERATOR (28035) 8B4744	EA		2					34	1
X20 01253		GUARD ASSEMBLY: FAN A (28035) 5C43228	EA		1					34	7
X20 01254		GUARD ASSEMBLY, FAN B (28035) 8B41572	EA		1					34	7
0 01255	5310-761-6882	NUT, PLAIN, HEXAGON: FILTER MTG (96906) MS51967-2	EA		4	•	•	•	•		
0 01256	5310-761-6882	NUT, PLAIN, HEXAGON: WRAPPER TO FILTER AND GENERATOR SCREW (96906) MS51967-2	EA		10	•	•	•	•	34	3
0 01257		NUT, PLAIN, WING: FILTER MTG (96906) MS35425-13	EA		4	•	•	•	•	34	5
0 01258	5305-988-1723	SCREW, MACHINE: FAN GUARD ASSY MTG B (96906) MS35206-279	EA		1	•	•	•	•	34	6

(1) SMR CODE / INDEX NO.	(2) FEDERAL STOCK NUMBER	(3) DESCRIPTION / REFERENCE NO. & MFR. CODE	USABLE ON CODE	(4) UNIT OF ISSUE	(5) QTY INC IN UNIT PACK	(6) QTY INC IN UNIT	(7) 15 DAY ORGANIZATIONAL MAINTENANCE ALW (a)	(b) 1-5	(c) 6-20	(d)	(8) ILLUSTRATION (a) FIG NO.	(b) ITEM NO.
0 01335		NUT, PLAIN, WING: PANEL GROUNDING (96906) MS35425-13	B	EA		1	•	•	•	•	49	22
0 01346	5305-071-2241	SCREW, CAP, HEXAGON HEAD: PANEL GROUNDING (96906) MS90725-10	B	EA		1	•	•	•	•	49	18
0 01358	5305-266-1929	SCREW, MACHINE: LOOP CLAMP MTG (00000) 4A415A	B	EA		5	•	•	•	•	49	9
0 01369	5305-958-3050	SCREW, TAPPING, THREAD FORMING: CONTACT MTG (96906) MS24649-24	B	EA		3	•	•	•	•		
0 01400	5310-849-7733	WASHER, FLAT: LOOP CLAMP BRACKET MTG (96906) MS15795-311	B	EA		2	•	•	•	•	49	8
0 01402	5310-722-5998	WASHER, FLAT: LOOP CLAMP MTG (96906) MS15795-305	B	EA		3	•	•	•	•	49	14
0 01403	5310-582-5677	WASHER, FLAT: PANEL GROUNDING (96906) MS15795-310	B	EA		2	•	•	•	•	49	20
0 01415	5310-596-7674	WASHER, LOCK: LOOP CLAMP AND BRACKET MTG (96906) MS35338-22	B	EA		4	•	•	•	•	49	13
0 01416	5310-209-5309	WASHER, LOCK: LOOP CLAMP BRACKET MTG, CABLE CLAMP SHUT (96906) MS35338-23	B	EA		5	•	•	•	•	49	17
0 01417	5310-012-0214	WASHER, LOCK: LOOP CLAMP MTG (96906) MS35338-26	B	EA		1	•	•	•	•	49	3
0 01418	5310-186-7454	WASHER, LOCK: LOOP CLAMP MTG (96906) MS35338-41	B	EA		2	•	•	•	•	49	5
0 01419	5310-527-3269	WASHER, LOCK: PANEL GROUNDING (96906) MS35333-23	B	EA		4	•	•	•	•	49	19
01447		4408 - CONNECTING DEVICES										
X20 01473		BLOCK, TERMINAL (28835) 10J225	B	EA		1					49	24
X20 01474		BLOCK, TERMINAL (28835) 8W1520	B	EA		2					49	23

(1) SMR CODE / INDEX NO.	(2) FEDERAL STOCK NUMBER	(3) DESCRIPTION — REFERENCE NO. & MFR. CODE	USABLE ON CODE	(4) UNIT OF ISSUE	(5) QTY INC. IN UNIT PACK	(6) QTY INC. IN UNIT	(7) 15 DAY ORGANIZATIONAL MAINTENANCE AL* (a) 1-5	(b) 6-20	(c) 21-50	(d) 51-100	(8) ILLUSTRATION (a) FIG NO.	(b) ITEM NO.
X20 01494		GUARD ASSEMBLY: TERMINAL BLOCK (28035) 8BW1517	B	EA		1					45	
X20 01495		BRACKET: BOTTOM (28035) 8BW1544	B	EA		1					45	25
X20 01496		BRACKET: TOP (28035) 8BW1518	B	EA		1					45	28
X20 01497		GUARD (28035) 8BW1519	B	EA		1					45	26
0 01498	5305-156-2937	SCREW, MACHINE: BRACKET TO GUARD AND GUARD ASSY MTG (96906) MS35190-249	B	EA		6	•	•	•	•	45	27
0 01504	5310-732-0958	NUT, PLAIN, HEXAGON: TERMINAL STUD (96906) MS51967-8	B	EA		10	•	•	•	•	36	39
0 01506		NUT, PLAIN, WING: TERMINAL STUD (96906) MS35425-26	B	EA		5	•	•	•	•	36	41
0 01520	5310-184-8628	WASHER, FLAT: TERMINAL STUD (96906) MS15795-816	B	EA		15	•	•	•	•	36	37
0 01528	5310-637-9541	WASHER, LOCK: TERMINAL STUD (96906) MS35338-46	B	EA		15	•	•	•	•	36	38
01530		4409 - PROTECTIVE DEVICES, ELECTRICAL										
P 0 01531	5920-280-5002	FUSE, CARTRIDGE: 10 AMP (75915) 314010	B	EA		3	2	2	4	8	45	30
P 0 01532	5920-539-6920	FUSE, CARTRIDGE: 30 AMP (75915) 314030	B	EA		3	2	2	4	8	45	31
01534		4410 - SWITCHING, TIMING AND SPEED CONTROL										
X20 01663	5935-258-4660	CONNECTOR, RECEPTACLE, ELECTRICAL: MULTIRANGE SWITCH (28035) AW745		EA		1					46	3
0 01673	5310-331-1963	NUT, PLAIN, HEXAGON: MALE PLUG TO PANEL ASSY (00000) 8136960		EA		2	•	•	•	•	46	1

(1) SMR CODE / INDEX NO.	(2) FEDERAL STOCK NUMBER	(3) DESCRIPTION REFERENCE NO. & MFR. CODE — USABLE ON CODE	(4) UNIT OF ISSUE	(5) QTY INC IN UNIT PACK	(6) QTY INC IN UNIT	(7) 15-DAY ORGANIZATIONAL MAINTENANCE ALW (a) 1-5	(b) 6-20	(c) 21-50	(d) 51-100	(8) ILLUSTRATION (a) FIG NO.	(b) ITEM NO.
01799		4414 - RADIO INTERFERENCE SUPPRESSION									
P O 01801	5910-504-7418	CAPACITOR, FIXED, PAPER DIELECTRIC: CONTROL PANEL (28835) CA381	EA		2	*	*	2	2	36	55
P O 01802	5910-561-8847	CAPACITOR, FIXED, PAPER DIELECTRIC: CONTROL PANEL (28835) CA504	EA		6	*	2	3	5	41	2
P O 01803	5910-669-3913	CAPACITOR, FIXED, PAPER DIELECTRIC: CONTROL PANEL (28835) CA484	EA		1	*	2	3	5	41	7
P O 01804	5910-669-3913	CAPACITOR, FIXED, PAPER DIELECTRIC: CONTROL PANEL (28835) CA484 (INITIALLY SHOWN AS INDEX NO. 01803)	EA		1					36	3
P O 01805	5910-561-8847	CAPACITOR, FIXED, PAPER DIELECTRIC: DC, BRUSH (28835) CA504 (INITIALLY SHOWN AS INDEX NO. 01802)	EA		4					34	11
P O 01806	5910-669-3913	CAPACITOR, FIXED, PAPER DIELECTRIC: WELDER GENERATOR AC, BRUSH END (28835) CA484 (INITIALLY SHOWN AS INDEX NO. 01803)	EA		2					34	25
N O 01807		LEAD ASSEMBLY: CAPACITOR — A	EA		4					34	15
		MANUFACTURE FROM:									
X20 01808	5940-050-6210	TERMINAL LUG (00000) 506210 — A	EA		4						
X2 01809	5975-543-1924	TERMINAL LUG — A	EA		4						
P O 01810	6145-164-7027	WIRE, ELECTRICAL — A (4 IN. REQUIRED FOR EACH LEAD ASSEMBLY)	FT			SEE GRP 9501					
N O 01811		LEAD ASSEMBLY: CAPACITOR — A	EA		2					34	21
		MANUFACTURE FROM:									
X20 01812	5975-543-1924	TERMINAL, LUG — A	EA		4						
P O 01813	6145-164-7027	WIRE, ELECTRICAL — A (2 IN. REQUIRED FOR EACH LEAD ASSEMBLY)	FT			SEE GRP 9501					

(1) SMR CODE / INDEX NO.	(2) FEDERAL STOCK NUMBER	(3) DESCRIPTION / REFERENCE NO. & MFR. CODE	USABLE ON CODE	(4) UNIT OF ISSUE	(5) QTY INC IN UNIT PACK	(6) QTY INC IN UNIT	(7) 15-DAY ORGANIZATIONAL MAINTENANCE ALW (a) 1-5	(b) 6-20	(c) 21-50	(d) 51-100	(8) ILLUSTRATION (a) FIG NO.	(b) ITEM NO.
0 01829	5305-855-0960	SCREW, TAPPING, THREAD CUTTING: CAPACITOR MTG (96906) MS24629-36	A	EA		4	•	•	•	•	34	14
0 01830	5305-052-6921	SCREW, TAPPING, THREAD CUTTING: RING TO BELL END (96906) MS24629-57	A	EA		2	•	•	•	•	34	26
XXX 01831		STRAP, GROUND: BODY FLOOR TO FRAME (16004) 33995	B	EA		1					44	23
XXX 01832		STRAP, GROUND: GENERATOR TO BODY FLOOR (16004) 33994	B	EA		1					44	21
0 01833	5310-809-8544	WASHER, FLAT: CAPACITOR MTG (96906) MS27183-7	A	EA		8	•	•	•	•	34	24
0 01834	5310-331-2001	WASHER, FLAT: CAPACITOR MTG (00000) 8137484	A	EA		4	•	•	•	•	34	12
0 01835	5310-527-3288	WASHER, LOCK: CAPACITOR (96906) MS35333-22	B	EA		8	•	•	•	•	36	4
0 01836	5310-596-7691	WASHER, LOCK: CAPACITOR MTG (96906) MS35335-32		EA		4	•	•	•	•	36	4
0 01837	5310-596-7691	WASHER, LOCK: CAPACITOR MTG (96906) MS35335-32		EA		2	•	•	•	•	41	3
0 01838		WASHER, LOCK: CAPACITOR MTG (96906) MS45904-58	A	EA		6	•	•	•	•	34	13
0 01839	5310-045-3299	WASHER, LOCK: CAPACITOR MTG (96906) MS35338-42	A	EA		2	•	•	•	•	41	6
0 01840	5310-045-3296	WASHER, LOCK: CAPACITOR MTG (96906) MS35338-43	B	EA		2	•	•	•	•		
0 01841		WASHER, LOCK: CAPACITOR BRACKET MTG (96906) MS45904-58	B	EA		3	•	•	•	•	36	33
0 01842	5310-012-0380	WASHER, LOCK: GROUND STRAP MTG (96906) MS35338-25	B	EA		6	•	•	•	•	44	20
0 01843	5310-732-5984	WASHER, LOCK: GROUND STRAP TO FRAME (76189) 1222-07	B	EA		2	•	•	•	•	44	24

(1) SMR CODE / INDEX NO.	(2) FEDERAL STOCK NUMBER	(3) DESCRIPTION / REFERENCE NO. & MFR. CODE / USABLE ON CODE	(4) UNIT OF ISSUE	(5) QTY INC IN UNIT PACK	(6) QTY INC IN UNIT	(7) 30-DAY DS MAINT ALLOWANCE (a) 1-20	(b) 21-50	(c) 51-100	(8) 30-DAY GS MAINT ALLOWANCE (a) 1-20	(b) 21-50	(c) 51-100	(9) 1-YR ALW PER 100 EQUIP CNTGCY	(10) DEPOT MAINT ALW-PER 100 EQUIP	(11) ILLUSTRATION (a) FIG NO.	(b) ITEM NO
00001		SECTION V - REPAIR PARTS FOR DS, GS, AND DEPOT MAINTENANCE													
00002		GROUP 03 - FUEL SYSTEM													
00003		0306 - TANKS, LINES, FITTINGS													
X20 00004		BOLT, U: TUBE TO BRACKET (97403) 13200E9249	EA		1									27	5
0 00005	5310-550-0777	NUT, PLAIN, HEXAGON: SUPPORT AND U-BOLT MTG (96906) MS35690-402	EA		4	•	•	•	•	•	•	•	•	27	1
0 00006	5305-639-8116	SCREW, CAP, HEXAGON HEAD: SUPPORT MTG (96906) MS35297-8	EA		2	•	•	•	•	•	•	•	•	27	11
X20 00007		SUPPORT: FILLER TUBE (97403) 13200E9248	EA		1									27	3
X20 00008		TUBE ASSEMBLY, FILLER: GAS TANK (97403) 13200E9247	EA		1									27	4
X1 00009		TUBE, FILLER (97403) 13200E9250	EA		1										
0 00010	5310-582-5677	WASHER, FLAT: SUPPORT AND U-BOLT MTG (96906) MS15795-310	EA		6	•	•	•	•	•	•	•	•		
0 00011	5310-582-5965	WASHER, LOCK: SUPPORT AND U-BOLT MTG (96906) MS35338-44	EA		4	•	•	•	•	•	•	•	•	27	2
00012		0308 - ENGINE SPEED GOVERNOR													
P F 00013	3030-080-8817	BELT, V: GOVERNOR DRIVE (24161) A43	EA		1	2	3	5	2	3	5	60	100	3	1
X20 00014	2990-980-5111	BLOCK, CLAMP: DRIVE ASSEMBLY MTG (97403) 13200E0912	EA		1									3	8
X20 00015	2990-980-5111	BLOCK, CLAMP: GOVERNOR TO BRACKET MTG (97403) 13200E0912	EA		1									2	14

(1) SMR CODE / INDEX NO.	(2) FEDERAL STOCK NUMBER	(3) DESCRIPTION — REFERENCE NO. & MFR. CODE — USABLE ON CODE	(4) UNIT OF ISSUE	(5) QTY INC IN UNIT PACK	(6) QTY INC IN UNIT	(7) 30-DAY DS MAINT ALLOWANCE (a) 1-20	(b) 21-50	(c) 51-100	(8) 30-DAY GS MAINT ALLOWANCE (a) 1-20	(b) 21-50	(c) 51-100	(9) 1-YR ALW PER 100 EQUIP CNTGCY	(10) DEPOT MAINT ALW-PER 100 EQUIP	(11) ILLUSTRATION (a) FIG NO	(b) ITEM NO
P F 00031	3110-148-8505	BEARING, BALL, ANNULAR: GOVERNOR FLANGE (43334) 3203X1	EA		1	•	•	•	•	•	•	2	3	1	4
P F 00032	3110-227-2032	BEARING, BALL, RADIAL: ROCKER SHAFT (77260) X328	EA		2	•	•	•	•	•	•	2	3	1	12
P F 00033	3110-801-4938	BEARING, THRUST: GOVERNOR (77260) X1349	EA		1	•	•	•	•	•	•	2	3	1	22
F 00034	5306-801-8915	BOLT, EYE: ADJUSTING (77260) GA070-3	EA		1	•	•	•	•	•	•	•	•	2	27
F 00035	5306-274-3171	BOLT, SHOULDER: LEVER MTG (77260) G8800	EA		1	•	•	•	•	•	•	•	•	2	25
XPF 00036		BRACKET, ADJUSTING SCREW: AUXILIARY (77260) G11499-1	EA		1									2	6
XPF 00037	2805-395-7992	BRACKET, STOP, RIGHT HAND (77260) 09557	EA		1									2	23
P F 00038	2990-540-8147	BUSHING: GOVERNOR BODY (77260) X2721	EA		1	•	•	•	•	•	•	•	•	1	13
XPF 00039	5340-598-0934	CLIP, RETAINING: WEIGHT PIN (77260) X2956	EA		4									1	5
X20 00040	4730-627-3321	CUP, OIL, LUBRICATION (77260) X495	EA		1									2	1
XPF 00041	2990-888-2859	FLANGE, GOVERNOR (77260) G11314-11	EA		1									1	1
P G 00042	5330-250-6184	GASKET: DRAIN PLUG (77260) X523	EA		1	•	•	•	•	•	•	2	3	2	19
P F 00043	2990-255-1255	GASKET: GOVERNOR BODY (77260) X1425	EA		1	•	•	•	•	•	•	2	3	1	2
XPF 00044	2990-888-2862	HOUSING, GOVERNOR (77260) 09042-126	EA		1									1	14
XPF 00045	2990-888-2857	LEVER ASSEMBLY: THROTTLE (77260) A6264	EA		1									2	7

(1) SMR CODE / INDEX NO.	(2) FEDERAL STOCK NUMBER	(3) DESCRIPTION — REFERENCE NO. & MFR. CODE — USABLE ON CODE	(4) UNIT OF ISSUE	(5) QTY INC IN UNIT PACK	(6) QTY INC IN UNIT	(7) 28-DAY DS MAINT ALLOWANCE (a) 1-20	(b) 21-50	(c) 51-100	(8) 30-DAY GS MAINT ALLOWANCE (a) 1-20	(b) 21-50	(c) 51-100	(9) 1-YR ALW PER 100 EQUIP CNTGCY	(10) DEPOT MAINT ALW-PER 100 EQUIP	(11) ILLUSTRATION (a) FIG NO.	(b) ITEM NO
F 00061	5305-281-6386	SCREW, ASSEMBLED WASHER: FLANGE TO BODY (77260) X1685	EA		4	•	•	•	•	•	•	•	•	1	25
F 00062	5305-651-2689	SCREW, ASSEMBLED WASHER: YOKE TO ROCKER SHAFT (77260) X1687	EA		2	•	•	•	•	•	•	•	•	1	19
F 00063	5305-584-7610	SCREW, CAP, HEXAGON HEAD: AUXILIARY LEVER TO THROTTLE LEVER (77260) X1787	EA		1	•	•	•	•	•	•	•	•	2	8
G 00064	5305-584-7610	SCREW, CAP, HEXAGON HEAD: BODY (77260) X1675	EA		1	•	•	•	•	•	•	•	•	2	20
P F 00065	5330-681-2756	SEAL, OIL: BODY AT ROCKER SHAFT (77260) X1566	EA		1	•	•	•	•	•	•	2	3	1	16
P F 00066	2990-202-2339	SEAL, PLAIN, ENCASED: FLANGE (77260) X1221	EA		1	•	•	•	•	•	•	2	3	1	3
F 00067	5305-276-8006	SETSCREW: SPEED ADJUSTING LEVER (77260) X890-A	EA		1	•	•	•	•	•	•	•	•	2	21
XF 00068	2990-888-2896	SHAFT, AND SPIDER, GOVERNOR (77260) A6626	EA		1									1	8
XF 00069		SHAFT, ROCKER ARM (77260) G18331	EA		1									1	17
XF 00070	2990-628-9105	SLEEVE, GOVERNOR (77260) G10525	EA		1									1	24
XF 00071	5340-680-5783	SPACER, RING (77260) X2307	EA		2									1	11
XF 00072	2990-249-1731	SPRING, HELICAL, EXTENSION: GOVERNOR (77260) SW1236	EA		1									2	28
XF 00073	2990-888-2869	SPRING, HELICAL, EXTENSION: GOVERNOR (77260) SW1556	EA		1									2	26
P F 00074	2805-629-8041	WASHER, THRUST: GOVERNOR (77260) G13417	EA		1	•	•	•	•	•	•	2	3	1	21
P F 00075	2805-580-1579	WASHER, THRUST: GOVERNOR (77260) G13416	EA		1	•	•	•	•	•	•	2	3	1	23

(1) SMR CODE / INDEX NO	(2) FEDERAL STOCK NUMBER	(3) DESCRIPTION / REFERENCE NO. & MFR. CODE / USABLE ON CODE	(4) UNIT OF ISSUE	(5) QTY INC IN UNIT PACK	(6) QTY INC IN UNIT	(7) 15-DAY ORGANIZATIONAL MAINTENANCE ALW (a) 1-5	(b) 6-20	(c) 21-50	(d) 51-100	(8) ILLUSTRATION (a) FIG NO.	(b) ITEM NO.
P 0 01678	5905-089-9038	RHEOSTAT ASSEMBLY (28835) AW606-8	EA		1	•	•	•	•	46	5
P 0 01679	5935-283-2752	CONNECTOR, RECEPTACLE, ELECTRICAL: FEMALE (28835) AW746	EA		1	•	•	•	•	37	28
0 01696	5305-290-7562	SCREW, MACHINE: MALE PLUG TO PANEL ASSY, NO. 6-32 THD SIZE, 3/4 IN. LG	EA		2	•	•	•	•	46	4
0 01704	5310-085-4007	WASHER, LOCK: MALE PLUG TO PANEL ASSY (96906) MS35338-41	EA		2	•	•	•	•	46	2
01721		4411 - RESISTORS COMPONENTS									
X20 01723	5905-355-8575	BRACKET, RESISTOR (44655) 9	B EA		1					44	10
X20 01724		CLIP, WIRE: RESISTOR ELECTRICAL LEAD (16004) 34461	B EA		1						
0 01730	5310-012-0622	NUT, PLAIN, HEXAGON: RESISTOR BRACKET MTG (96906) MS35649-82	B EA		2	•	•	•	•	44	7
0 01733	5310-761-6882	NUT, PLAIN, HEXAGON: VARIABLE RESISTOR LEAD CLIP MTG (96906) MS51967-2	B EA		1	•	•	•	•		
X20 01736	5905-158-4725	RESISTOR, ADJUSTABLE: OVERSPEED (44655) 0581	B EA		1					43	9
0 01775	5305-068-0502	SCREW, CAP, HEXAGON HEAD: VARIABLE RESISTOR LEAD CLIP (96906) MS90725-6	B EA		1	•	•	•	•		
0 01779	5305-012-1832	SCREW, MACHINE: RESISTOR BRACKET MTG (96906) MS35206-283	B EA		2	•	•	•	•	44	11
0 01793	5310-013-8930	WASHER, LOCK: RESISTOR BRACKET MTG (96906) MS35333-21	B EA		4	•	•	•	•	44	8
0 01798	5310-012-1637	WASHER, LOCK: VARIABLE RESISTOR LEAD CLIP MTG (96906) MS35335-25	B EA		1	•	•	•	•		

(1) SMR CODE / INDEX NO.	(2) FEDERAL STOCK NUMBER	(3) DESCRIPTION REFERENCE NO. & MFR. CODE	USABLE ON CODE	(4) UNIT OF ISSUE	(5) QTY INC IN UNIT PACK	(6) QTY INC IN UNIT	(7) 15-DAY ORGANIZATIONAL MAINTENANCE ALW (a) 1-5	(b) 6-20	(c) 21-50	(d) 51-100	(8) ILLUSTRATION (a) FIG NO.	(b) ITEM NO.
0 01814	5310-012-0361	NUT, PLAIN, HEXAGON: CAPACITOR MTG (96906) MS35649-102	A	EA		4	•	•	•	•	41	8
0 01815	5310-012-1361	NUT, PLAIN, HEXAGON: CAPACITOR MTG (96906) MS35649-102	A	EA		4	•	•	•	•	36	2
0 01816	5310-012-0622	NUT, PLAIN, HEXAGON: CAPACITOR MTG (96906) MS35649-82	A	EA		8	•	•	•	•	41	5
0 01817	5310-543-5656	NUT, PLAIN, HEXAGON: CAPACITOR MTG (96906) MS35691-402	B	EA		2	•	•	•	•	45	12
0 01818	5310-732-0558	NUT, PLAIN, HEXAGON: GROUND STRAP TO BODY FLOOR (96906) MS51967-8	B	EA		1	•	•	•	•	44	25
020 01819		RING: CAPACITOR MTG (28035) 120464	A	EA		1					34	26
A 0 01820		SCREW, ASSEMBLED WASHER: CAPACITOR MTG	A	EA		6						
0 01821	5305-984-6191	SCREW, MACHINE (96906) MS35206-243	A	EA		6	•	•	•	•	34	22
0 01822	5310-045-3299	WASHER, LOCK (96906) MS35338-42	A	EA		6	•	•	•	•	34	23
0 01823	5305-269-3211	SCREW, CAP, HEXAGON HEAD: GROUND STRAP TO BODY FLOOR (96906) MS90725-60	B	EA		1	•	•	•	•	44	22
0 01824	5305-984-6212	SCREW, MACHINE: CAPACITOR MTG (96906) MS35206-265		EA		4	•	•	•	•	41	1
0 01825	5305-984-6212	SCREW, MACHINE: CAPACITOR MTG (96906) MS35206-265	A	EA		4	•	•	•	•	36	5
0 01826	5305-984-6193	SCREW, MACHINE: CAPACITOR MTG (96906) MS35206-245	A	EA		2	•	•	•	•	41	4
0 01827	5305-984-6210	SCREW, MACHINE: CAPACITOR MTG (96906) MS35206-263	B	EA		4	•	•	•	•	36	5
0 01828	5305-984-6212	SCREW, MACHINE: CAPACITOR MTG (96906) MS35206-265	B	EA		2	•	•	•	•	45	39

(1) SMR CODE / INDEX NO.	(2) FEDERAL STOCK NUMBER	(3) DESCRIPTION / REFERENCE NO. & MFR. CODE / USABLE ON CODE	(4) UNIT OF ISSUE	(5) QTY INC IN UNIT PACK	(6) QTY INC IN UNIT	(7) 15-DAY ORGANIZATIONAL MAINTENANCE ALW (a) 1-5	(b) 6-20	(c) 21-50	(d) 51-100	(8) ILLUSTRATION (a) FIG NO	(b) ITEM NO
0 01844	5310-899-2528	WASHER, LOCK: RING TO END BELL (96906) MS35904-68 A	EA		2	•	•	•	•	34	27
01850		GROUP 95 - GENERAL USE STANDARDIZED PARTS									
01851		9501 - BULK MATERIAL									
P 0 01853	9535-233-1860	ALUMINUM ALLOY SHEET	SH			•	•	•	•		
P 0 01854	9515-267-1119	ALUMINUM STRIP, COLD ROLLED	FT								
P 0 01856	5510-255-9495	LUMBER, HARDWOOD	FBM			•	•	•	•		
P 0 01858	5330-202-4061	RUBBER SHEET, SOLID	FT			•	•	•	•		
P 0 01859	6145-299-4430	WIRE, ELECTRICAL	FT			•	•	•	•		
P 0 01861	6145-164-7027	WIRE, ELECTRICAL	FT			•	•	•	•		
P 0 01865	6145-284-0326	WIRE, ELECTRICAL	FT			•	•	•	•		

(1) SMR CODE / INDEX NO.	(2) FEDERAL STOCK NUMBER	(3) DESCRIPTION / REFERENCE NO. & MFR CODE / USABLE ON CODE	(4) UNIT OF ISSUE	(5) QTY INC IN UNIT PACK	(6) QTY INC IN UNIT	(7) 30-DAY DS MAINT ALLOWANCE (a) 1-20	(b) 21-50	(c) 51-100	(8) 90-DAY GS MAINT ALLOWANCE (a) 1-20	(b) 21-50	(c) 51-100	(9) 1-YR ALW PER 100 EQUIP ENTGCY	(10) DEPOT MAINT ALW PER 100 EQUIP	(11) ILLUSTRATION (a) FIG NO.	(b) ITEM NO
X20 00016		BRACKET: GOVERNOR MTG (97403) 132006911	EA		1									2	15
X20 00017		EXTENSION, ARM: CARBURETOR AND GOVERNOR LINKAGE (97403) 132006913	EA		1									2	12
X20 00018	2990-445-5384	GOVERNOR, GASOLINE ENGINE: ENGINE SPEED (77260) MA2000	EA		1										
P O 00019	2990-861-1280	ADAPTER, GOVERNOR DRIVE (77260) A2968	EA		1	•	•	•	•	•	•	2	6	3	4
P F 00020	3110-144-8505	BEARING, BALL, ANNULAR: DRIVE SHAFT (43334) 3203X1	EA		1	•	•	•	•	•	•	4	20	4	5
P F 00021	3120-383-3833	BEARING, SLEEVE: GOVERNOR DRIVE BRACKET (77260) G3168	EA		1	•	•	•	•	•	•	4	20	4	7
X2F 00022	2990-888-2863	BRACKET GOVERNOR: GOVERNOR DRIVE (77260) G9149-1	EA		1									4	4
X2F 00023	2990-770-2918	COLLAR, DRIVE SHAFT (77260) G3463	EA		1									4	1
X2F 00024	2990-888-2864	COVER, DRIVE COUPLING (77260) G9549	EA		1									4	6
P F 00025	2990-255-1255	GASKET: COVER TO BRACKET (77260) X1425	EA		1	2	2	3	2	2	3	36	200	4	8
F 00026	5315-014-2489	PIN, GROOVED, HEADLESS: COLLAR TO SHAFT (77260) X1066	EA		1	•	•	•	•	•	•	•	•	4	10
F 00027	5305-281-6386	SCREW, ASSEMBLED WASHER: COVER MTG (77260) X1605	EA		4	•	•	•	•	•	•	•	•	4	3
P F 00028	5330-289-9441	SEAL, PLAIN, ENCASED: GOVERNOR DRIVE SHAFT (77260) X652	EA		1	•	2	2	•	2	2	20	200	4	2
P F 00029	2990-998-8201	SHAFT, GOVERNOR DRIVE (77260) G0025	EA		1	•	•	•	•	•	•	2	6	4	9
P O R 00030	2990-679-8778	GOVERNOR ASSEMBLY: ENGINE SPEED (77260) GC3962	EA		1	•	•	2	•	•	2	10	4	2	2

(1) SMR CODE / INDEX NO.	(2) FEDERAL STOCK NUMBER	(3) DESCRIPTION / REFERENCE NO. & MFR CODE / USABLE ON CODE	(4) UNIT OF ISSUE	(5) QTY INC IN UNIT PACK	(6) QTY INC IN UNIT	(7) 30-DAY DS MAINT ALLOWANCE (a) 1-20	(b) 21-30	(c) 31-100	(8) 30-DAY GS MAINT ALLOWANCE (a) 1-20	(b) 21-50	(c) 51-100	(9) 1-YR ALW PER 100 EQUIP ENTGCY	(10) DEPOT MAINT ALW PER 100 EQUIP	(11) ILLUSTRATION (a) FIG NO.	(b) ITEM NO.
X2F 00046		LEVER, AUXILIARY (77260) G12758-1	EA		1									2	30
X20 00047	2990-423-3127	LEVER, SPEED, ADJUSTING (77260) G9954	EA		1									2	24
F 00048	5310-994-5568	NUT, PLAIN, HEXAGON: ADJUSTING SCREW EYE TO AUXILIARY BRACKET (77260) X250-6	EA		2	•	•	•	•	•	•	•	•	2	5
F 00049		NUT, PLAIN, HEXAGON: SPRING ADJUSTING LEVER SCREW (77260) X977	EA		1	•	•	•	•	•	•	•	•	2	22
F 00050	5310-807-1468	NUT, SELF-LOCKING: AUXILIARY LEVER SCREW (77260) X1843	EA		1	•	•	•	•	•	•	•	•	2	29
X20 00051	2990-354-3378	OILER: OIL LEVEL PLUG (77260) X2054	EA		1									2	3
O 00052	5315-423-3924	PIN, ESCUTCHEON: GOVERNOR NAMEPLATE MTG (77260) X455	EA		2	SEE CHP 2210									
F 00053	2990-998-4200	PIN, GROOVED, HEADLESS: WEIGHT (77260) G14007	EA		2	•	•	•	•	•	•	•	•	1	6
F 00054	5315-230-1008	PIN, SPRING: AUXILIARY BRACKET AND THROTTLE LEVER (77260) X2602	EA		2	•	•	•	•	•	•	•	•	2	4
X20 00055	3810-317-6754	PLATE, INSTRUCTION: GOVERNOR OIL LEVEL (77260) X1945	EA		1	SEE CHP 2210									
X20 00056	2990-246-9335	PLATE, NAME: GOVERNOR BODY (77260) X581	EA		1	SEE CHP 2210									
X2F 00057	5340-616-4118	PLUG, EXPANSION: BODY AT ROCKER SHAFT (77260) X2019	EA		1									1	9
X2F 00058	5330-097-2670	RETAINER, PACKING: ROCKER SHAFT (77260) G12211	EA		1									1	15
X2F 00059		RING, RETAINING: DRIVE SHAFT (77260) X4223	EA		1									1	20
X2F 00060	5340-998-2223	RING, RETAINING: ROCKER SHAFT (77260) X1904	EA		2									1	10

(1) SMR CODE / INDEX NO.	(2) FEDERAL STOCK NUMBER	(3) DESCRIPTION — REFERENCE NO. & MFR. CODE — USABLE ON CODE	(4) UNIT OF ISSUE	(5) QTY INC IN UNIT PACK	(6) QTY INC IN UNIT	(7) 30-DAY DS MAINT ALLOWANCE (a) 1-20	(b) 21-50	(c) 51-100	(8) 30-DAY GS MAINT ALLOWANCE (a) 1-20	(b) 21-50	(c) 51-100	(9) 1-YR ALW PER 100 EQUIP ON STOCK	(10) DEPOT MAINT ALW-PER 100 EQUIP	(11) ILLUSTRATION (a) FIG NO	(b) ITEM NO
X2F 00076	2990-888-2853	WEIGHT ASSEMBLY: CONTROL (77260) A2448	EA		2									1	7
X2F 00077	2990-631-3615	WIRE, ROCKER SHAFT (77260) 09838	EA		1									1	18
X20 00078	2990-888-2855	ROD ASSEMBLY, GOVERNOR: GOVERNOR TO CARBURETOR EXTENSION (77260) A6A04	EA		1									2	
X2F 00079	2990-972-0127	BALL JOINT: ROD (77260) X1531	EA		2									2	13
F 00080	5310-619-4977	NUT, PLAIN, HEXAGON: ROD AND BALL JOINT (77260) X1013-1	EA		4	•	•	•	•	•	•	•	•	2	10
X2F 00081		ROD, THROTTLE (77260) 09847	EA		1									2	11
F 00082		WASHER, LOCK: BALL JOINT (77260) X831	EA		2	•	•	•	•	•	•	•	•	2	9
X20 00083	2990-977-7369	PULLEY, GROOVED: ADAPTER DRIVE (76241) AC55	EA		1									3	3
0 00084	5305-013-9031	SETSCREW: PULLEY LOCKING (00000) 139031	EA		1	•	•	•	•	•	•	•	•	3	2
0 00085	5305-269-2805	SCREW, CAP, HEXAGON HEAD: GOVERNOR ADAPTER NTD TO BRACKET (96906) MS90726-62	EA		2	•	•	•	•	•	•	•	•	3	11
0 00086	5305-269-2805	SCREW, CAP, HEXAGON HEAD: GOVERNOR TO BRACKET (96906) MS90726-62	EA		2	•	•	•	•	•	•	•	•	2	16
P 0 00087	2990-895-6364	SHAFT ASSEMBLY, GOVERNOR DRIVE: FLEXIBLE (57711) 3X5853A2-9A	EA		1	•	•	2	•	•	2	6	10	3	
X20 00088		CABLE, DRIVE (57711) 3X5853A2-13	EA		1									3	6
X20 00089		HOUSING, CABLE (57711) 3X5853A2-14	EA		1									3	5
X20 00090		RING, SNAP (57711) 3X5853A2-5	EA		1									3	7

(1) SMR CODE / INDEX NO.	(2) *FEDERAL STOCK NUMBER	(3) DESCRIPTION REFERENCE NO. & MFR. CODE — USABLE ON CODE	(4) UNIT OF ISSUE	(5) QTY INC IN UNIT PACK	(6) QTY INC IN UNIT	(7) 30 DAY DS MAINT ALLOWANCE (a) 1-20	(b) 21-50	(c) 51-100	(8) 30-DAY GS MAINT ALLOWANCE (a) 1-20	(b) 21-50	(c) 51-100	(9) 1-YR ALW PER 100 EQUIP CNTGCY	(10) DEPOT MAINT ALW-PER 100 EQUIP	(11) ILLUSTRATION (a) FIG NO.	(b) ITEM NO
0 00091	5310-047-4043	WASHER, FLAT: GOVERNOR DRIVE ASSEMBLY MTG (00000) 8161877	EA		2	•	•	•	•	•	•	•	•	3	9
0 00092	5310-047-4043	WASHER, FLAT: GOVERNOR TO BRACKET (00000) 8161877	EA		2	•	•	•	•	•	•	•	•	2	18
0 00093	5310-018-7123	WASHER, LOCK: GOVERNOR DRIVE ASSEMBLY MTG (00000) 187123	EA		2	•	•	•	•	•	•	•	•	3	10
0 00094	5310-018-7123	WASHER, LOCK: GOVERNOR TO BRACKET (00000) 187123	EA		2	•	•	•	•	•	•	•	•	2	17
00095		0312 - ACCELERATOR, THROTTLE OR CHOKE CONTROL													
X20 00096		LINKAGE ASSEMBLY, THROTTLE (97403) 13200E0903	EA		1										
X20 00097		BELLCRANK: THROTTLE (97403) 13200E0906	EA		1									5	3
X20 00098		BRACKET: BELLCRANK (97403) 13200E0904	EA		1									5	2
X20 00099		CABLE, CONTROL: WELDER THROTTLE (97403) 13200E0907	EA		1									5	13
X20 00100		CLAMP, CABLE (97403) 13200E0908	EA		1									5	15
X20 00101		LINK, CONTROL (97403) 13200E0909	EA		1									5	6
0 00102	5310-732-0846	NUT, SELF-LOCKING, HEXAGON: BELLCRANK SCREW AND THROTTLE CABLE CLAMP SCREW (96906) MS51968-1	EA		1	•	•	•	•	•	•	•	•	5	4
0 00103	5310-877-5797	NUT, SELF-LOCKING, HEXAGON: LINK MTG (96906) MS35650-102	EA		1	•	•	•	•	•	•	•	•	5	9
0 00104	5305-267-8978	SCREW, CAP, HEXAGON HEAD: BELLCRANK TO BRACKET AND CLAMP MTG (96906) MS90726-8	EA		2	•	•	•	•	•	•	•	•	5	1
X20 00105		STOP, WIRE: THROTTLE CONTROL CABLE (97403) 13200E0905	EA		1									5	16

(1) SMR CODE / INDEX NO.	(2) FEDERAL STOCK NUMBER	(3) DESCRIPTION — REFERENCE NO. & MFR CODE	USABLE ON CODE	(4) UNIT OF ISSUE	(5) QTY INC IN UNIT PACK	(6) QTY INC IN UNIT	(7) 30-DAY DS MAINT ALLOWANCE (a) 1-20	(b) 21-50	(c) 51-100	(8) 30-DAY GS MAINT ALLOWANCE (a) 1-20	(b) 21-50	(c) 51-100	(9) 1-YR ALW PER 100 EQUIP CNTGCY	(10) DEPOT MAINT ALW-PER 100 EQUIP	(11) ILLUSTRATION (a) FIG NO.	(b) ITEM NO.
00119		GROUP 06 - ELECTRICAL SYSTEM														
00120		0606 - ENGINE SAFETY CONTROLS														
F 00121	5306-225-8492	BOLT, MACHINE: RELAY MTG (96906) MS90725-27	A	EA		2	•	•	•	•	•	•	•	•	28	14
X20 00122		BRACKET: OVERSPEED RELAY BOX MTG (97403) 13200E0957	A	EA		1									28	20
X20 00123		CLAMP, LOOP (96906) MS21333-009	A	EA		3										
X20 00124		INSTALLATION, OVERSPEED (16004) 34200	B	EA		1										
X20 00125		BRACKET: RELAY (16004) 33971	B	EA		1									44	29
X20 00126	5905-355-8575	BRACKET, RESISTOR (44655) 9	B	EA		1	SEE GMP 4411									
X20 00127	5340-543-3292	CLIP: WIRING HARNESS (96906) MS35140-8	B	EA		3									42	23
X20 00128	5340-886-7226	CLIP, DISCONNECT: WIRING HARNESS (97084) 2255	B	EA		2									42	16
X20 00129		CLIP, WIRE: VARIABLE RESISTOR ELECTRICAL LEAD (16004) 34461	B	EA		1	SEE GMP 4411									
X20 00130		CONNECTOR, ELECTRICAL: WIRING HARNESS (81257) 2323	B	EA		1									42	13
X2F 00131	5940-859-5956	GROMMET, RESISTOR BRACKET (08315) 21-2-46	B	EA		1	SEE GMP 4411									
0 00132	5310-012-0622	NUT, PLAIN, HEXAGON: DISCONNECT CLIP (96906) MS35649-82	B	EA		2	•	•	•	•	•	•	•	•	42	18
0 00133	5310-013-3530	NUT, PLAIN, HEXAGON: OVERSPEED RELAY (96906) MS35649-62	B	EA		1	•	•	•	•	•	•	•	•	44	14
0 00134	5310-012-0614	NUT, PLAIN, HEXAGON: RELAY TO BRACKET (96906) MS35650-102	B	EA		2	•	•	•	•	•	•	•	•	44	26

(1) SMR CODE / INDEX NO.	(2) FEDERAL STOCK NUMBER	(3) DESCRIPTION — REFERENCE NO. & MFR. CODE	USABLE ON CODE	(4) UNIT OF ISSUE	(5) QTY INC IN UNIT PACK	(6) QTY INC IN UNIT	(7) 30-DAY DS MAINT ALLOWANCE (a) 1-20	(b) 21-50	(c) 51-100	(8) 30-DAY GS MAINT ALLOWANCE (a) 1-20	(b) 21-50	(c) 51-100	(9) 1-YR ALW PER 100 EQUIP CNTGCY	(10) DEPOT MAINT ALW-PER 100 EQUIP	(11) ILLUSTRATION (a) FIG NO.	(b) ITEM NO.
0 00151	5310-809-8946	WASHER, FLAT: WIRING HARNESS CLIP MTG (96906) MS27183-8	B	EA		3	•	•	•	•	•	•	•	•	42	22
0 00152	5310-013-8530	WASHER, LOCK: DISCONNECT CLIP (96906) MS35333-21	B	EA		2	•	•	•	•	•	•	•	•	42	17
0 00153	5310-013-8526	WASHER, LOCK: OVERSPEED RELAY (96906) MS35333-20	B	EA		2	•	•	•	•	•	•	•	•	44	13
0 00154	5310-043-2226	WASHER, LOCK: RELAY TO BRACKET (96906) MS35338-24	B	EA		2	•	•	•	•	•	•	•	•	44	18
0 00155	5310-013-8530	WASHER, LOCK: RESISTOR BRACKET MTG (96906) MS35333-21	B	EA		4	SEE GMP 4311									
0 00156	5310-012-1637	WASHER, LOCK: VARIABLE RESISTOR LEAD CLIP MTG (96906) MS35338-25	B	EA		1	SEE GMP 4311									
0 00157	5310-043-2226	WASHER, LOCK: WIRING HARNESS CLIP MTG (96906) MS35338-24	B	EA		3	•	•	•	•	•	•	•	•	42	19
X20 00158		WIRING HARNESS: IGNITION SWITCH (97403) 13200E0955		EA		1									42	5
X20 00159		WIRING HARNESS: RELAY (96906) 13200E0954		EA		1									42	21
0 00160	5310-761-6882	NUT, PLAIN, HEXAGON: BRACKET AND CLAMP MTG (96906) MS51967-2	A	EA		8	•	•	•	•	•	•	•	•	28	18
X20 00161		RELAY ASSEMBLY, OVERSPEED (97403) 13200E0953	A	EA		1										
P 0 00162	4920-735-6111	RELAY ASSEMBLY, OVERSPEED (28035) DM4995	A	EA		1	•	•	2	•	•	2	6	5		
X20 00163	5935-283-2054	ADAPTER, CONNECTOR	A	EA		2										
X2F 00164		BOX, RELAY (28035) DM5019	A	EA		1									28	32
X2F 00165		CATCH (28035) FV1407	A	EA		1									28	17

(1) SMR CODE / INDEX NO.	(2) FEDERAL STOCK NUMBER	(3) DESCRIPTION / REFERENCE NO. & MFR. CODE / USABLE ON CODE	(4) UNIT OF ISSUE	(5) QTY INC IN UNIT PACK	(6) QTY INC IN UNIT	(7) 30-DAY DS MAINT ALLOWANCE (a) 1-20	(b) 21-50	(c) 51-100	(8) 30-DAY GS MAINT ALLOWANCE (a) 1-20	(b) 21-50	(c) 51-100	(9) 1-YR ALW PER 100 EQUIP CNTGCY	(10) DEPOT MAINT ALW-PER 100 EQUIP	(11) ILLUSTRATION (a) FIG NO.	(b) ITEM NO
X2F 00180	5975-296-8681	CONNECTOR, BOX — A	EA		2										
X2F 00181	5325-262-5944	GROMMET, RUBBER: RELAY BOX, TOP — A	EA		1									4	6
M F 00182		LEAD ASSEMBLY: MICROSWITCH TO RESISTOR — A	EA		2									26	30
		MANUFACTURE FROM:													
X2F 00183	5940-636-7114	TERMINAL, LUG (96906) MS20659-2 — A	EA		2										
P F 00184	6145-660-8933	WIRE, ELECTRICAL — A	FT			SEE SPP 9501									
		(5 IN. REQUIRED FOR EACH LEAD ASSEMBLY)													
M F 00185		LEAD ASSEMBLY: RESISTOR JUMPER — A	EA		1									26	28
		MANUFACTURE FROM:													
X2F 00186	5940-636-7114	TERMINAL, LUG (96906) MS20659-2 — A	EA		2										
P F 00187	6145-660-8933	WIRE, ELECTRICAL (9 IN. REQUIRED) — A	FT			SEE SPP 9501									
M F 00188		LEAD ASSEMBLY: RESISTOR TO TERMINAL BOARD — A	EA		1									26	4
		MANUFACTURE FROM:													
X2F 00189	5940-636-7114	TERMINAL, LUG (96906) MS20659-2 — A	EA		1										
X2F 00190	5940-155-9693	TERMINAL, LUG (80058) AN659-28 — A	EA		1										
P F 00191	6145-660-8933	WIRE, ELECTRICAL — A	FT			SEE SPP 9501									
		(9 IN. REQUIRED)													
X20 00192	5975-284-9305	NIPPLE, CABLE — A	EA		4										
O 00193	5310-011-7047	NUT, PLAIN, HEXAGON: RELAY BRACKET MTG (96906) MS35690-424 — A	EA		1	•	•	•	•	•	•	•	•		

D

(1) SMR CODE / INDEX NO.	(2) FEDERAL STOCK NUMBER	(3) DESCRIPTION REFERENCE NO. & MFR. CODE	USABLE ON CODE	(4) UNIT OF ISSUE	(5) QTY INC IN UNIT PACK	(6) QTY INC IN UNIT	(7) 30-DAY DS MAINT ALLOWANCE (a) 1-20	(b) 21-50	(c) 51-100	(8) 30-DAY GS MAINT ALLOWANCE (a) 1-20	(b) 21-50	(c) 51-100	(9) 1-YR ALW PER 100 EQUIP CNTGCY	(10) DEPOT MAINT ALW-PER 100 EQUIP	(11) ILLUSTRATION (a) FIG NO	(b) ITEM NO
F 00207	5310-010-6495	WASHER, LOCK; OUTSIDE COIL MTG (96906) MS35338-3	A	EA		1	•	•	•	•	•	•	•	•		
F 00208	5310-010-8578	WASHER, LOCK; RELAY BRACKET MTG (96906) MS35339-6	A	EA		1	•	•	•	•	•	•	•	•		
F 00209	5310-010-6495	WASHER, LOCK; RESISTOR TERMINAL AND MICROSWITCH MTG (96906) MS35338-3	A	EA		5	SEE [illegible] 4311									
O 00210	5305-068-0502	SCREW, CAP, HEXAGON HEAD; BRACKET MTG (96906) MS90725-6	A	EA		4	•	•	•	•	•	•	•	•	28	21
O 00211	5305-071-2241	SCREW, CAP, HEXAGON HEAD; SPACER MTG (96906) MS90725-10	A	EA		1	•	•	•	•	•	•	•	•		
F 00212	5305-013-2711	SCREW, MACHINE; TERMINAL BOARD MTG (96906) MS35206-232	A	EA		2	•	•	•	•	•	•	•	•	28	10
X20 00213		SPACER; OVERSPEED RELAY BOX MTG (97403) 13200E0958	A	EA		1									28	13
X20 00214	5940-633-5519	SPLICE, CONDUCTOR; HARNESS CONNECTION (00000) 573000	A	EA		6									42	13
O 00215	5310-809-3078	WASHER, FLAT; BOX TO BRACKET, BOX TO WALL (96906) MS27183-11	A	EA		3	•	•	•	•	•	•	•	•	28	12
F 00216	5310-167-0820	WASHER, FLAT; RELAY MTG (88044) AN960-516	A	EA		2	•	•	•	•	•	•	•	•	28	16
O 00217	5310-582-5965	WASHER, LOCK; BRACKET TO BOX, BRACKET TO WALL (96906) MS35338-44	A	EA		5	•	•	•	•	•	•	•	•	28	19
F 00218	5310-010-3320	WASHER, LOCK; RELAY MTG (96906) MS35338-7	A	EA		2	•	•	•	•	•	•	•	•	28	15
O 00219	5310-012-1637	WASHER, LOCK; TERMINAL BLOCK (96906) MS35337-25	A	EA		8	•	•	•	•	•	•	•	•		
H O 00220		WIRING HARNESS; OVERSPEED TO ENGINE LEAD (97403) 13200E0956 MANUFACTURE FROM:		EA		1										
X20 00221	5935-152-1046	CONNECTOR, BOX; ELBOW (59730) 321		EA		2										

(1) SMR CODE / INDEX NO.	(2) FEDERAL STOCK NUMBER	(3) DESCRIPTION — REFERENCE NO. & MFR. CODE / USABLE ON CODE	(4) UNIT OF ISSUE	(5) QTY INC IN UNIT PACK	(6) QTY INC IN UNIT	(7) 30-DAY DS MAINT ALLOWANCE (a) 1-20	(b) 21-50	(c) 51-100	(8) 30-DAY GS MAINT ALLOWANCE (a) 1-20	(b) 21-50	(c) 51-100	(9) 1-YR ALW PER 100 EQUIP QTY/CY	(10) DEPOT MAINT ALW PER 100 EQUIP	(11) ILLUSTRATION (a) FIG NO.	(b) ITEM NO
X27 00236		ADAPTER (92066) BC72 — B	EA		2									29	1
P F 00237	4940-734-5198	LOCK ASSEMBLY, BRAKE (92066) 2209A2 — B	EA		1	•	•	2	•	•	2	6	5	29	3
X20 00238		PLATE, SWITCH (92066) BC158 — B	EA		1	SEE AMP 2210									
P O 00239	5930-734-5206	SWITCH, PUSH; BRAKE LOCK (92066) BC159 — B	EA		1	•	•	2	•	•	2	6	5	29	12
P F 00240	2530-040-2228	LOCK ASSEMBLY, BRAKE (00000) 7355593 — A	EA		1	•	•	2	•	•	2	6	5	29	3
X27 00241	5310-732-0560	NUT, PLAIN, HEXAGON; BRAKE VALVE MTG (96906) MS51968-14	EA		1									29	8
A O 00242		SCREW, ASSEMBLED WASHER; CLAMP MTG — A	EA		1										
O 00243	5305-013-2900	SCREW, TAPPING, THREAD FORMING; CLAMP MTG (96906) MS35207-261 — A	EA		1	•	•	•	•	•	•	•	•	45	14
O 00244	5310-809-8946	WASHER, LOCK; CLAMP MTG (96906) MS27183-8 — A	EA		1	•	•	•	•	•	•	•	•	42	22
F 00245	5305-269-2805	SCREW, CAP, HEXAGON HEAD; BRAKE VALVE MTG (96906) MS90726-62	EA		1	•	•	•	•	•	•	•	•	29	5
O 00246	5305-013-1979	SCREW, MACHINE; BRAKE LOCK MTG — A	EA		2	•	•	•	•	•	•	•	•	42	11
P O 00247	2590-738-7535	SWITCH, BRAKE LOCK (00000) 7387535 — A	EA		1	•	•	2	•	•	2	6	5	42	12
F 00248	5310-777-0222	WASHER, FLAT; ADAPTER TO BRAKE LOCK SWITCH — A	EA		2	•	•	•	•	•	•	•	•	29	2
F 00249	5310-595-6057	WASHER, FLAT; BRAKE VALVE MTG (96906) MS15795-315 — B	EA		1	•	•	•	•	•	•	•	•	29	6
F 00250	5310-823-8803	WASHER, FLAT; LOCK SWITCH MTG, 5/8 IND SIZE (96906) MS27183-21 — B	EA		1	•	•	•	•	•	•	•	•	29	6

(1) SMR CODE / INDEX NO.	(2) FEDERAL STOCK NUMBER	(3) DESCRIPTION REFERENCE NO. & MFR CODE — USABLE ON CODE	(4) UNIT OF ISSUE	(5) QTY INC IN UNIT PACK	(6) QTY INC IN UNIT	(7) 30-DAY DS MAINT ALLOWANCE (a) 1-20	(b) 21-50	(c) 51-100	(8) 30-DAY GS MAINT ALLOWANCE (a) 1-20	(b) 21-50	(c) 51-100	(9) 1-YR ALW PER 100 EQUIP CONTGCY	(10) DEPOT MAINT ALW PER 100 EQUIP	(11) ILLUSTRATION (a) FIG NO.	(b) ITEM NO.
0 00106	5305-989-6194	SCREW, MACHINE: WIRE STOP (96906) MS35206-246	EA		1	•	•	•	•	•	•	•	•	5	17
0 00107		WASHER, FLAT: BELLCRANK MTG (96906) MS27183-10	EA		1	•	•	•	•	•	•	•	•		
0 00108	5310-011-5707	WASHER, LOCK: LINK MTG (96906) MS35338-62	EA		1	•	•	•	•	•	•	•	•	5	5
0 00109	5310-582-5965	WASHER, LOCK: THROTTLE CABLE CLAMP SCREW (96906) MS35338-44	EA		1	•	•	•	•	•	•	•	•	5	14
0 00110	5310-877-5797	NUT, SELF-LOCKING, HEXAGON: SWIVEL STOP (96906) MS35650-102	EA		1	•	•	•	•	•	•	•	•	5	9
X20 00111	2990-888-2693	ROD ASSEMBLY, GOVERNOR (77260) A3939	EA		1										
X20 00112		BALL JOINT: GOVERNOR ROD (77260) X1532	EA		1									5	11
0 00113	5310-877-5797	NUT, SELF-LOCKING, HEXAGON: GOVERNOR ROD (96906) MS35650-102	EA		3	•	•	•	•	•	•	•	•	5	9
0 00114	5310-732-0846	NUT, SELF-LOCKING, HEXAGON: GOVERNOR ROD (96906) MS51968-1	EA		1	•	•	•	•	•	•	•	•	5	4
X20 00115		ROD, THROTTLE: GOVERNOR ROD (77260) 05796	EA		1									5	10
0 00116	5310-011-5707	WASHER, LOCK: GOVERNOR ROD (96906) MS35338-62	EA		1	•	•	•	•	•	•	•	•	5	5
X20 00117		SPRING, RETURN: ACCELERATOR (97403) 13200E0915	EA		1									5	12
X20 00118		STOP, SWIVEL: CARBURETOR ROD (97403) 13200E0914	EA		1									5	8

(1) SMR CODE / INDEX NO.	(2) FEDERAL STOCK NUMBER	(3) DESCRIPTION REFERENCE NO. & MFR CODE	USABLE ON CODE	(4) UNIT OF ISSUE	(5) QTY INC IN UNIT PACK	(6) QTY INC IN UNIT	(7) 30-DAY DS MAINT ALLOWANCE (a) 1-20	(b) 21-50	(c) 51-100	(8) 30-DAY GS MAINT ALLOWANCE (a) 1-20	(b) 21-50	(c) 51-100	(9) 1-YR ALW PER 100 EQUIP CNTGCY	(10) DEPOT MAINT ALW-PER 100 EQUIP	(11) ILLUSTRATION (a) FIG NO.	(b) ITEM NO
0 00135	5310-012-0622	NUT, PLAIN, HEXAGON: RESISTOR BRACKET MTG (96906) MS35649-82	B	EA		2	SEE GRP 4811									
0 00136	5310-761-6882	NUT, PLAIN, HEXAGON: VARIABLE RESISTOR LEAD CLIP MTG (96906) MS51967-2	B	EA		1	SEE GRP 4811									
F 00137	5310-761-6882	NUT, PLAIN, HEXAGON: VARIABLE RESISTOR MTG (96906) MS51967-2	B	EA		4	SEE GRP 4811									
0 00138	5310-012-0618	NUT, PLAIN, HEXAGON: WIRING HARNESS CLIP MTG (96906) MS35650-102	B	EA		3	•	•	•	•	•	•	•	•	42	20
P 0 00140	4940-996-7170	RELAY ASSEMBLY: OVERSPEED (16004) 33996	B	EA		1	•	•	2	•	•	2	6	5	44	32
XI 00141		RELAY: OVERSPEED (77342) PR3043	B	EA		1									44	28
XRO 00142	5905-158-4725	RESISTOR, ADJUSTABLE: OVERSPEED (44655) 0581	9	EA		1	SEE GRP 4811									
P F 00143	5905-856-2222	RESISTOR, VARIABLE: BATTERY CHARGING (28835) BM809	B	EA		1	SEE GRP 4811									
0 00144	5305-068-0902	SCREW, CAP, HEXAGON HEAD: VARIABLE RESISTOR LEAD CLIP MTG (96906) MS90725-6	B	EA		1	SEE GRP 4811									
0 00145	5305-012-1832	SCREW, MACHINE: DISCONNECT CLIP (96906) MS35206-243	B	EA		2	•	•	•	•	•	•	•	•	42	15
0 00146	5305-996-1851	SCREW, MACHINE: RELAY TO BRACKET (96906) MS35207-267	B	EA		2	•	•	•	•	•	•	•	•	44	30
0 00147	5305-012-1832	SCREW, MACHINE: RESISTOR BRACKET MTG (96906) MS35206-243	B	EA		2	SEE GRP 4811									
0 00148	5305-013-2900	SCREW, MACHINE: WIRING HARNESS CLIP MTG (96906) MS35207-261	B	EA		3	•	•	•	•	•	•	•	•	42	14
0 00149	5310-577-5506	WASHER, FLAT: OVERSPEED RELAY (96906) MS15795-306	B	EA		1	•	•	•	•	•	•	•	•	44	12
0 00150	5310-809-8546	WASHER, FLAT: RELAY TO BRACKET (96906) MS27183-8	B	EA		2	•	•	•	•	•	•	•	•	44	27

(1) SMR CODE / INDEX NO	(2) FEDERAL STOCK NUMBER	(3) DESCRIPTION REFERENCE NO. & MFR CODE	USABLE ON CODE	(4) UNIT OF ISSUE	(5) QTY INC IN UNIT PACK	(6) QTY INC IN UNIT	(7) 30-DAY DS MAINT ALLOWANCE (a) 1-20	(b) 21-50	(c) 51-100	(8) 30-DAY GS MAINT ALLOWANCE (a) 1-20	(b) 21-50	(c) 51-100	(9) 1-YR ALS PER 100 EQUIP ENTGCY	(10) DEPOT MAINT ALW-PER 100 EQUIP	(11) ILLUS-TRATION (a) FIG NO	(b) ITEM NO
X2F 00166		LATCH: LID (28035) FV1406	A	EA		1									28	3
X2F 00167		LID, BOX: RELAY (28035) DM5350	A	EA		1									28	7
F 00168	5310-905-8851	NUT, PLAIN, HEXAGON: MICROSWITCH MTG AND ELECTRICAL LEADS (96906) MS21083N06	A	EA		5	•	•	•	•	•	•	•	•		
X1 00169		PIN, CATCH: SPRING AND CATCH TO LID (28035) FV1408A	A	EA		1									28	1
X2F 00170		NAMEPLATE: OVERSPEED RESET (28035) DM5027	A	EA		1	SEE GRP 2210									
F 00171	5305-071-2239	SCREW, CAP, HEXAGON HEAD: RELAY BOX TO WALL (96906) MS90725-12	A	EA		2	•	•	•	•	•	•	•	•	28	11
F 00172	5305-895-0966	SCREW, TAPPING, THREAD CUTTING: OVERSPEED RESET NAMEPLATE MTG (96906) MS24629-39	A	EA		2	SEE GRP 2210									
X1 00173		SPRING, CATCH (28035) FV1409	A	EA		1									28	2
X1 00174		STRAP: BACK (28035) DM5351R	A	EA		1										
X1 00175		STRAP: SIDE (28035) FV1424R	A	EA		1										
P F 00176	5940-331-3081	TERMINAL BOARD: OVERSPEED RELAY (28035) DM3309	A	EA		1	•	•	•	•	•	•	4	5	28	31
F 00177	5305-043-6747	SCREW, MACHINE: ELECTRICAL LEADS MTG TO TERMINAL BOARD (96906) MS35207-268	A	EA		8	•	•	•	•	•	•	•	•		
F 00178	5310-209-1491	WASHER, FLAT: TERMINAL BOARD MTG (96906) MS15795-606	A	EA		2	•	•	•	•	•	•	•	•	28	23
F 00179	5310-013-1088	WASHER, LOCK: TERMINAL BOARD MTG (96906) MS35338-041	A	EA		2	•	•	•	•	•	•	•	•	28	8

(1) SMR CODE / INDEX NO.	(2) FEDERAL STOCK NUMBER	(3) DESCRIPTION REFERENCE NO. & MFR. CODE	USABLE ON CODE	(4) UNIT OF ISSUE	(5) QTY INC IN UNIT PACK	(6) QTY INC IN UNIT	(7) 30-DAY DS MAINT ALLOWANCE (a) 1-20	(b) 21-50	(c) 51-100	(8) 30-DAY GS MAINT ALLOWANCE (a) 1-20	(b) 21-50	(c) 51-100	(9) 1-YR ALW PER 100 EQUIP CMTCY	(10) DEPOT MAINT ALW PER 100 EQUIP	(11) ILLUSTRATION (a) FIG NO.	(b) ITEM NO
F 00194	5310-905-8951	NUT, PLAIN, HEXAGON: RESISTOR TERMINALS AND RESISTORS MTG (96906) MS21083N06	A	EA		5	SEE CMP 4401									
0 00195	5310-275-6800	NUT, PLAIN, HEXAGON: RESISTOR TO TERMINAL BOARD, LEAD MTG (96906) MS35649-81	A	EA		3	•	•	•	•	•	•	•	•		
XDF 00196	3431-803-3507	RELAY, OVERSPEED (28035) DM5017A	A	EA		1									28	22
XDF 00197		INSULATION: MICRODWITCH (28035) 5069586	A	EA		1									28	26
XDF 00198		PLATE, SWITCH: MTG (28035) DM5018	A	EA		1									28	27
XDF 00199		PLUG, SWITCH: OVERSPEED RELAY (28035) DM6606	A	EA		1									28	29
F 00200	5305-669-8629	SCREW, MACHINE: MICRODWITCH MTG (96906) MS35225-34	A	EA		2	•	•	•	•	•	•	•	•	28	24
F 00200A	5305-637-1126	SCREW, MACHINE: MICRODWITCH PLATE TO RELAY (96906) MS35214-67	A	EA		2	•	•	•	•	•	•	•	•	28	34
P F 00201	5930-735-6144	SWITCH, MICRO: REMY (28035) MZRLX2	A	EA		1	•	•	2	•	•	2	6	5	28	25
F 00202	5310-018-7241	WASHER, LOCK: MICRODWITCH PLATE TO RELAY	A	EA		2	•	•	•	•	•	•	•	•	28	33
P F 00203	5905-652-3258	RESISTOR, ADJUSTABLE: EXCITER FIELD, 30 OHM, 80W, FOR 60 CYCLE OPERATION (28035) AW531	A	EA		1	SEE CMP 4401									
P F 00204	5905-279-5723	RESISTOR, FIXED, WIRE WOUND: GENERATOR FIELD DISCHARGE, 300 OHM, 80W (28035) CW1150		EA		1	SEE CMP 4401									
0 00205	5305-018-1317	SCREW, CAP, HEXAGON HEAD: RELAY BRACKET MTG	A	EA		1	•	•	•	•	•	•	•	•		
F 00206	5305-988-8248	SCREW, MACHINE: RESISTOR TERMINAL AND RESISTOR MTG (96906) MS35273-15	A	EA		5	SEE CMP 4401									

(1) SMR CODE / INDEX NO.	(2) FEDERAL STOCK NUMBER	(3) DESCRIPTION — REFERENCE NO & MFR CODE / USABLE ON CODE	(4) UNIT OF ISSUE	(5) QTY INC IN UNIT PACK	(6) QTY INC IN UNIT	(7) 30-DAY DS MAINT ALLOWANCE (a) 1-20	(b) 21-50	(c) 51-100	(8) 30-DAY GS MAINT ALLOWANCE (a) 1-20	(b) 21-50	(c) 51-100	(9) 1-YR ALW PER 100 EQUIP ENTGCY	(10) DEPOT MAINT ALW-PER 100 EQUIP	(11) ILLUSTRATION (a) FIG NO.	(b) ITEM NO.
X20 00222		CONNECTOR, LINE (79550) 877	EA		2										
X20 00223		INSULATION, SLEEVE (79550) 835	EA		4										
X20 00224		INSULATION, SLEEVE (79550) 835A	EA		2										
X20 00225	5940-534-0991	TERMINAL, LUG (96906) MS35436-6	EA		4										
X20 00226	5940-557-2343	TERMINAL, LUG (96906) MS35436-11	EA		2										
X20 00227		TERMINAL, WIRE (79550) 1883	EA		2										
P 0 00228	6145-299-4430	WIRE, ELECTRICAL: COPPER, TINNED, FINISHED, NO. 14 AWG (13 FT REQUIRED)	FT			SEE GRP 9501									
P 0 00229	6145-284-0326	WIRE, ELECTRICAL: COPPER, TINNED, FINISHED, NO. 12 AWG (8 FT REQUIRED)	FT			SEE GRP 9501									
00230		0608 - MISCELLANEOUS ITEMS													
X2F 00231	2530-563-8316	ADAPTER, MASTER CYLINDER OUTLET: BRAKE LINE TO BRAKE LOCK A (63477) LFC2832	EA		2	•	•	•	•	•	•	•	•	29	1
X2F 00232	5340-200-6175	CLAMP, LOOP: BRAKE LOCK SWITCH MTG A	EA		1									29	4
X20 00233		CLAMP, LOOP: HARNESS TO CHASSIS A (96906) MS21333-009	EA		1									42	23
X20 00234	5325-720-9054	GROMMET: WELDER CABLES A (96906) MS35490-20	EA		2									11	13
X2F 00235		KIT, ELECTRIC BRAKE B (16004) 33569	EA		1										

(1) SMR CODE / INDEX NO.	(2) FEDERAL STOCK NUMBER	(3) DESCRIPTION — REFERENCE NO. & MFR. CODE — USABLE ON CODE	(4) UNIT OF ISSUE	(5) QTY INC IN UNIT PACK	(6) QTY INC IN UNIT	(7) 30-DAY DS MAINT ALLOWANCE (a) 1-20	(b) 21-50	(c) 51-100	(8) 30-DAY GS MAINT ALLOWANCE (a) 1-20	(b) 21-50	(c) 51-100	(9) 1-YR ALW PER 100 EQUIP ENTSCY	(10) DEPOT MAINT ALW-PER 100 EQUIP	(11) ILLUSTRATION (a) FIG NO.	(b) ITEM NO
F 00251	5310-637-9581	WASHER, LOCK: BRAKE VALVE MTG (96906) MS35338-46 B	EA		1	•	•	•	•	•	•	•	•	29	7
F 00252	5310-582-5965	WASHER, LOCK: LOCK SWITCH MTG (96906) MS35338-44 A	EA		1	•	•	•	•	•	•	•	•	29	7
D20 00253		WIRING HARNESS: BRAKE LOCK SWITCH TO BRAKE LOCK (97403) 13200E0978	EA		1									42	1
X1 00254	5340-269-7705	BUSHING, RUBBER (00000) 573005	EA		2										
X1 00255	5935-300-9909	COVER, ELECTRICAL (00000) 573010	EA		1										
X1 00256	5940-057-2929	FERRULE, ELECTRICAL CONDUCTOR (00000) 572929	EA		2										
X1 00257	5935-768-7042	SHIELD, ELECTRICAL (00000) 573007	EA		1										
D20 00258		WIRING HARNESS: BRAKE LOCK TO CIRCUIT BREAKER (97403) 13200E0975	EA		1									42	2
X1 00259		CONNECTOR (00000) 7982726	EA		1										
X1 00260	5935-776-2642	CONNECTOR, PLUG, ELECTRICAL (00000) 7762642	EA		1										
X1 00261	5940-057-2929	FERRULE, ELECTRICAL CONDUCTOR (00000) 572929	EA		4										
X1 00262	5325-350-9277	GROMMET, CABLE (00000) 573005	EA		1										
X1 00263	5935-768-7042	SHIELD, CONNECTOR: FEMALE (00000) 573007	EA		1										

(1) SMR CODE / INDEX NO.	(2) FEDERAL STOCK NUMBER	(3) DESCRIPTION / REFERENCE NO & MFR CODE / USABLE ON CODE	(4) UNIT OF ISSUE	(5) QTY INC IN UNIT PACK	(6) QTY INC IN UNIT	(7) 30-DAY DS MAINT ALLOWANCE (a) 1-20	(b) 21-50	(c) 51-100	(8) 30-DAY GS MAINT ALLOWANCE (a) 1-20	(b) 21-50	(c) 51-100	(9) 1-YR ALW PER 100 EQUIP CNTGCY	(10) DEPOT MAINT ALW-PER 100 EQUIP	(11) ILLUSTRATION (a) FIG NO.	(b) ITEM NO
00264		0609 - LIGHTS													
X2H 00265		BRACKET: RECEPTACLE, TRAILER (97403) 13200E9006-2	EA		1										
X2H 00266		BRACKET: TAILLIGHT, LEFT SIDE (97403) 13200E9006-1	EA		2										
X2H 00267		BRACKET, EXTENSION: TRAILER POWER PLUG (97403) 13200E9007	EA		1										
H 00268	5310-732-0846	NUT, PLAIN, HEXAGON: RELOCATING ORIGINAL TAILLIGHT HARNESS CLAMP, 1/4-28 THD SIZE (96906) MS51968-1	EA		2				•	•	•	•	•		
H 00269	5305-068-0506	SCREW, CAP, HEXAGON HEAD: RELOCATING ORIGINAL TAILLIGHT HARNESS CLAMP, 1/4-28 THD SIZE, 3/4 IN. LG (96906) MS90726-6	EA		2				•	•	•	•	•		
H 00270	5305-269-3210	SCREW, CAP, HEXAGON HEAD: TRAILER EXTENSION POWER PLUG BRACKET MTG, 3/8-16 THD SIZE, 7/8 IN. LG (96906) MS90725-59	EA		2				•	•	•	•	•		
H 00271		WASHER, FLAT: RELOCATING ORIGINAL TAILLIGHT HARNESS CLAMP, 1/4 IN. THD SIZE (96906) MS27183-10	EA		4				•	•	•	•	•		
H 00272	5310-012-1637	WASHER, LOCK: RELOCATING ORIGINAL TAILLIGHT HARNESS CLAMP, 1/4 IN. THD SIZE (96906) MS35338-25	EA		2				•	•	•	•	•		
00273		0611 - HORN													
X2O 00274		BRACKET, HORN (97403) 13200E0916	EA		1									5	7

(1) SMR CODE / INDEX NO.	(2) FEDERAL STOCK NUMBER	(3) DESCRIPTION / REFERENCE NO. & MFR. CODE / USABLE ON CODE	(4) UNIT OF ISSUE	(5) QTY INC IN UNIT PACK	(6) QTY INC IN UNIT	(7) 30-DAY DS MAINT ALLOWANCE (a) 1-20	(b) 21-50	(c) 51-100	(8) 30-DAY GS MAINT ALLOWANCE (a) 1-20	(b) 21-50	(c) 51-100	(9) 1-YR ALW PER 100 EQUIP CNTGCY	(10) DEPOT MAINT ALW-PER 100 EQUIP	(11) ILLUSTRATION (a) FIG NO.	(b) ITEM NO
F 00291	5305-269-2801	SCREW, CAP, HEXAGON HEAD: LOCKING (96906) MS90726-58	EA		1	•	•	•	•	•	•	•	•	6	16
P F 00292	4940-089-9055	SHAFT, STUB (16004) 22694	EA		1	•	•	2	•	•	2	6	10	6	7
X2F 00293		SPACER: BEARING (16004) 22720	EA		1									6	13
P F 00294	4940-089-9051	SPRING (16004) 23126	EA		1	•	2	2	•	2	2	20	30	6	2
X2F 00295	5310-637-9541	WASHER, LOCK: LOCKING (96906) MS35338-46	EA		1									6	15
F 00296	5310-637-9541	WASHER, LOCK: LOCKING (96906) MS35338-46	EA		1	•	•	•	•	•	•	•	•		
X2F 00297		SHAFT, PROPELLER (97403) 13200E9030	EA		1	SEE GRP 0900									
F 00298	5305-018-1667	SCREW, CAP, HEXAGON HEAD: ADAPTER FLANGE MTG (96906) MS35296-86	EA		4	•	•	•	•	•	•	•	•	9	24
F 00299	5310-543-2705	WASHER, LOCK: FLANGE MTG (96906) MS35338-27	EA		4	•	•	•	•	•	•	•	•	6	10
00300		0003 - GEAR SHIFT CONTROLS													
X20 00301		BAR: DECLUTCHER SHIFTER (97403) 13200E0965	EA		1									7	10
X20 00302		BELLCRANK: ROD OPERATING, LOWER (97403) 13200E0951	EA		1									8	13
X20 00303		BRACKET: BELLCRANK, LOWER (97403) 13200E0959	EA		1									8	5
X20 00304		BRACKET: SHIFT DECLUTCHER BAR (97403) 13200E0964	EA		1									7	29
X20 00305	5340-989-0823	CLEVIS, ROD END: LOWER OPERATING RODS, BELLCRANK TO BELLCRANK, LOWER BELLCRANK TO THROWOUT ARM A (96906) MS35812-4	EA		4									8	8

(1) SMR CODE / INDEX NO.	(2) FEDERAL STOCK NUMBER	(3) DESCRIPTION — REFERENCE NO. & MFR. CODE — USABLE ON CODE	(4) UNIT OF ISSUE	(5) QTY INC IN UNIT PACK	(6) QTY INC IN UNIT	(7) 30-DAY DS MAINT ALLOWANCE (a) 1-20	(b) 21-50	(c) 51-100	(8) 30-DAY GS MAINT ALLOWANCE (a) 1-20	(b) 21-50	(c) 51-100	(9) 1-YR ALW PER 100 EQUIP CNTGCY	(10) DEPOT MAINT ALW-PER 100 EQUIP	(11) ILLUSTRATION (a) FIG NO.	(b) ITEM NO
0 00321	5305-682-5459	SCREW, CAP, HEXAGON HEAD: SHIFT LEVER MTG (96906) MS35298-123	EA		1	•	•	•	•	•	•	•	•	7	22
0 00322	5305-014-5207	SCREW, TAPPING, THREAD FORMING: ESCUTCHEON MTG (00000) 142507	EA		4	•	•	•	•	•	•	•	•	7	1
X20 00324		SPRING, HELICAL, COMPRESSION: SHIFT LEVER MTG (97403) 13200E0939	EA		1									7	5
X20 00325		SUPPORT: HAND LEVER (97403) 13200E0938	EA		1									7	23
0 00326	5310-050-2268	WASHER, FLAT: SHIFT LEVER MTG (96906) MS15795-218	EA		1	•	•	•	•	•	•	•	•	7	6
0 00327	5310-194-0743	WASHER, LOCK: HAND LEVER SUPPORT MTG (96906) MS35338-28	EA		2	•	•	•	•	•	•	•	•	7	20
X20 00328		LEVER, SHIFT (97403) 13200E0948	EA		1									7	15
0 00329	5310-732-0559	NUT, PLAIN, HEXAGON: CLEVIS AND LOWER BELLCRANK MTG (96906) MS51968-8	EA		9	-	•	•	•	•	•	•	•	8	1
0 00330	5310-732-0560	NUT, PLAIN, HEXAGON: SHIFT BAR BRACKET TO SHIFT LEVER END, ADJUSTING (96906) MS51968-14	EA		1	•	•	•	•	•	•	•	•	7	34
0 00331	5310-763-8505	NUT, PLAIN, HEXAGON: SHIFT BRACKET MTG (96906) MS51968-20	EA		1	•	•	•	•	•	•	•	•	7	33
0 00332	5310-880-7795	NUT, PLAIN, HEXAGON: SHIFTER BAR AND BRACKET MTG (96906) MS51968-11	EA		2	•	•	•	•	•	•	•	•	7	8
0 00333	5315-816-1798	PIN, COTTER: CLEVIS PINS A (96906) MS24665-285	EA		4	•	•	•		•	•	•	•	8	10
0 00334	5315-892-3044	PIN, COTTER: CLEVIS PIN, LOWER OPERATING ROD PIN B (96906) MS24665-283	EA		1	•	•	•	•	•	•	•	•	8	11
0 00335	5315-839-5822	PIN, COTTER: LOWER BELLCRANK TO UPPER BELLCRANK B (96906) MS24665-353	EA		3	•	•	•	•	•	•	•	•	8	10
0 00336	5315-839-5822	PIN, COTTER: SHIFTER SHOE PIN A (96906) MS24665-353	EA		1	•	•	•	•	•	•	•	•	7	13

(1) SMR CODE / INDEX NO.	(2) FEDERAL STOCK NUMBER	(3) DESCRIPTION — REFERENCE NO. & MFR. CODE / USABLE ON CODE	(4) UNIT OF ISSUE	(5) QTY INC IN UNIT PACK	(6) QTY INC IN UNIT	(7) 30-DAY DS MAINT ALLOWANCE (a) 1-20	(b) 21-50	(c) 51-100	(8) 30-DAY GS MAINT ALLOWANCE (a) 1-20	(b) 21-50	(c) 51-100	(9) 1-YR ALW PER 100 EQUIP CNTGCY	(10) DEPOT MAINT ALW-PER 100 EQUIP	(11) ILLUSTRATION (a) FIG NO.	(b) ITEM NO.
X1 00352		SHOE, SHIFTER (97403) 13200E0933	EA		2										
O 00353	5310-080-6004	WASHER, FLAT: LOWER BELLCRANK BRACKET MTG (96906) MS27183-14	EA		7	•	•	•	•	•	•	•	•	8	3
O 00354	5310-194-0743	WASHER, FLAT: SHIFT BAR BRACKET MTG (96906) MS35338-28	EA		1	•	•	•	•	•	•	•	•	7	27
O 00355	5310-087-7493	WASHER, FLAT: SHIFT BAR BRACKET MTG (96906) MS27183-13	EA		1	•	•	•	•	•	•	•	•	7	25
O 00356	5310-543-2705	WASHER, LOCK: LOWER BELLCRANK BRACKET MTG (96906) MS35338-27	EA		4	•	•	•	•	•	•	•	•	8	2
O 00357	5310-012-1574	WASHER, LOCK: SHIFT BAR BRACKET MTG (96906) MS35338-31	EA		1	•	•	•	•	•	•	•	•	7	32
O 00358	5310-637-9541	WASHER, LOCK: SHIFTER BAR AND BRACKET MTG (96906) MS35338-46	EA		2	•	•	•	•	•	•	•	•	7	9
00359		GROUP 09 - PROPELLER SHAFT													
00360		0900 - PROPELLER SHAFTS													
F 00361	5306-474-9676	BOLT, MACHINE: YOKE TO DECLUTCHER	EA		4	•	•	•	•	•	•	•	•	9	18
O 00362	4730-010-9350	FITTING, LUBRICATION: CROSS ASSEMBLY	EA		4	•	•	•	•	•	•	•	•	9	3
O 00363	4730-050-4208	FITTING, LUBRICATION: SPLINED YOKE AND FEMALE YOKE	EA		2	•	•	•	•	•	•	•	•	9	10
X2F 00364		FLANGE, COMPANION (78992) 598930	EA		1									9	7
F 00365	5305-639-4379	SETSCREW: COMPANION FLANGE	EA		1	•	•	•	•	•	•	•	•	9	6
X2F 00366		SHAFT, PROPELLER (97403) 13200E9030	EA		1									9	25

(1) SMR CODE / INDEX NO.	(2) FEDERAL STOCK NUMBER	(3) DESCRIPTION — REFERENCE NO. & MFR. CODE — USABLE ON CODE	(4) UNIT OF ISSUE	(5) QTY INC IN UNIT PACK	(6) QTY INC IN UNIT	(7) 30-DAY DS MAINT ALLOWANCE (a) 1-20	(b) 21-50	(c) 51-100	(8) 30-DAY GS MAINT ALLOWANCE (a) 1-20	(b) 21-50	(c) 51-100	(9) 1-YR ALW PER 100 EQUIP CNTGCY	(10) DEPOT MAINT ALW-PER 100 EQUIP	(11) ILLUSTRATION (a) FIG NO.	(b) ITEM NO.
P F 00382	4930-856-3887	SEAL, CORK; UNIVERSAL JOINT (70992) 53609	EA		8	7	13	27	7	13	27	320	800	9	4
X2F 00383		YOKE, FEMALE (70992) 5161010	EA		1									9	11
X2F 00384		YOKE, MALE (70992) 5161011	EA		1									9	9
F 00385	5310-194-0743	WASHER, LOCK; YOKE TO DECLUTCHER HTG (96906) MS35338-28	EA		4	•	•	•	•	•	•	•	•	9	17
X2F 00386		YOKE, HUB (70992) 5164010	EA		1									9	16
P F 00387	2520-741-1856	BEARING, ROLLER NEEDLE; UNIVERSAL JOINT (70992) 53605-1 (INITIALLY SHOWN AS INDEX NO. 00373)	EA		8									9	5
X2F 00388	5340-735-1167	RING, RETAINING; BEARING TO YOKE (70992) 53618	EA		8									9	2
P F 00389	2520-038-4518	SPIDER, UNIVERSAL JOINT (70992) 51625-1 (INITIALLY SHOWN AS INDEX NO. 00379)	EA		2									9	15
XI 00390		CROSS; UNIVERSAL JOINT (70992) 51625	EA		2									9	8
P F 00391	2530-735-1119	RETAINER, UNIVERSAL JOINT (70992) 51608 (INITIALLY SHOWN AS INDEX NO. 00381)	EA		8									9	19
P F 00392	4930-856-3887	SEAL, CORK; UNIVERSAL JOINT (70992) 53609 (INITIALLY SHOWN AS INDEX NO. 00382)	EA		8									9	4

(1) SMR CODE / INDEX NO.	(2) FEDERAL STOCK NUMBER	(3) DESCRIPTION — REFERENCE NO. & MFR. CODE — USABLE ON CODE	(4) UNIT OF ISSUE	(5) QTY INC IN UNIT PACK	(6) QTY INC IN UNIT	(7) 30-DAY DS MAINT ALLOWANCE (a) 1-20	(b) 21-50	(c) 51-100	(8) 30-DAY GS MAINT ALLOWANCE (a) 1-20	(b) 21-50	(c) 51-100	(9) 1-YR ALV PER 100 EQUIP CNTGCY	(10) DEPOT MAINT ALV PER 100 EQUIP	(11) ILLUSTRATION (a) FIG NO.	(b) ITEM NO.
H 00407	5305-727-5677	SCREW, CAP, HEXAGON HEAD: SUPPORT MTG (96906) MS90726-162	EA		4				•	•	•	•	•	43	9
H 00408	5305-725-4183	SCREW, CAP, HEXAGON HEAD: SUPPORT MTG, 1/2-20 THD SIZE, 1 1/2 IN. LG (96906) MS90726-113	EA		4				•	•	•	•	•	43	13
H 00409	5305-269-3210	SCREW, CAP, HEXAGON HEAD: TRAILER EXTENSION POWER PLUG BRACKET MTG, 3/8-16 THD SIZE, 7/8 IN. LG (96906) MS90725-59	EA		2	SEE GRP 0609									
X2H 00410		SUPPORT, BODY: CENTER (97403) 13200E9011	EA		2									43	10
H 00411	5310-823-8803	WASHER, FLAT: LOCK SWITCH MTG, 5/8 IN. THD SIZE (96906) MS27183-21	EA		1	SEE GRP 0608									
H 00412		WASHER, FLAT: RELOCATING ORIGINAL TAILLIGHT HARNESS CLAMP, 1/4 IN. THD SIZE (96906) MS27183-10	EA		4	SEE GRP 0609									
H 00413	5310-012-1637	WASHER, LOCK: RELOCATING ORIGINAL TAILLIGHT HARNESS CLAMP, 1/4-28 THD SIZE (96906) MS35338-25	EA		2	SEE GRP 0609									
H 00414	5310-012-1574	WASHER, LOCK: SU[illegible]RT MTG (96906) MS35338-[illegible]1	EA		4				•	•	•	•	•	43	18
H 00415	5310-012-0384	WASHER, LOCK: SUPPORT MTG, 1/2-20 THD SIZE (96906) MS35338-29	EA		8				•	•	•	•	•	43	11
00416		GROUP 18 - BODY, CAB, HOOD AND HULL													
00417		1812 - SPECIAL PURPOSE BODIES													
X2H 00418		BODY ASSEMBLY (97403) 13200E9033	EA		1										
O 00419	5306-012-8640	BOLT, SQUARE NECK: BLOCK MTG (00000) 128640	EA		4	•	•	•	•	•	•	•	•	21	2
X2F 00420		BOX, RECEPTACLE (81603) 661	EA		2									22	8

(1) SMR CODE / INDEX NO.	(2) FEDERAL STOCK NUMBER	(3) DESCRIPTION REFERENCE NO. & MFR. CODE — USABLE ON CODE	(4) U/I OF ISSUE	(5) QTY INC. IN UNIT PACK	(6) QTY INC. IN UNIT	(7) 30-DAY DS MAINT ALLOWANCE (a) 1-20	(b) 21-50	(c) 51-100	(8) 30-DAY GS MAINT ALLOWANCE (a) 1-20	(b) 21-50	(c) 51-100	(9) 1-YR ALW PER 100 EQUIP ENTGCY	(10) DEPOT MAINT ALW-PER 100 EQUIP	(11) ILLUSTRATION (a) FIG NO.	(b) ITEM NO
00275		GROUP 08 - POWER TRANSFER													
00276		0802 - CLUTCH AND CLUTCH CONTROLS													
X2F 00277	4940-967-9100	DRIVE SHAFT AND DECLUTCHER ASSEMBLY (97403) 13200E0972	EA		1										
X2F R 00278	2520-075-1714	DECLUTCHER ASSEMBLY (97403) 13200E9029	EA		1										
X2F 00279	3110-724-7884	BALL, BEARING: CLUTCH LOCKING (96906) MS19060-7	EA		1									6	3
P F 00280	3110-100-2366	BEARING, BALL, ANNULAR (38443) 20552	EA		1	•	•	2	•	•	2	6	10	6	12
P F 00281	3110-155-6197	BEARING, BALL, ANNULAR (38443) 2055	EA		1	•	•	2	•	•	2	6	10	6	14
P F 00282	4940-085-9056	CLUTCH, POWER TAKE OFF (16004) 22695	EA		1	•	•	•	•	•	•	4	6	6	5
C 00283	4730-050-4203	FITTING, LUBRICATION: CLUTCH (96906) MS15001-1	EA		1	•	•	•	•	•	•	•	•	6	6
O 00284	4730-877-1068	FITTING, LUBRICATION: GEAR (57733) 1909	EA		1	•	•	•	•	•	•	•	•		
X2F 00285		FLANGE: DRIVE SHAFT END (16004) 22778	EA		1									6	9
X2F 00286		FLANGE, ADAPTER: PROPELLER SHAFT (58923) E9029-1	EA		2									9	1
P F 00287	4940-085-9052	GEAR (16004) 22693	EA		1	•	•	2	•	•	2	6	10	6	1
F 00288	5315-050-5509	PIN, STRAIGHT, HEADLESS: FLANGE TO STUBSHAFT	EA		2	•	•	•	•	•	•	•	•	6	8
X2F 00289	5340-282-0082	RING, RETAINING: BEARING (96906) MS16625-200	EA		2									6	4
F 00290	5305-269-2801	SCREW, CAP, HEXAGON HEAD: FLANGE MTG (96906) MS90726-58	EA		4	•	•	•	•	•	•	•	•	6	11

S

(1) SMR CODE / INDEX NO.	(2) FEDERAL STOCK NUMBER	(3) DESCRIPTION — REFERENCE NO. & MFR. CODE — USABLE ON CODE	(4) UNIT OF ISSUE	(5) QTY INC IN UNIT PACK	(6) QTY INC IN UNIT	(7) 30-DAY DS MAINT ALLOWANCE (a) 1-20	(b) 21-50	(c) 51-100	(8) 30-DAY GS MAINT ALLOWANCE (a) 1-20	(b) 21-50	(c) 51-100	(9) 1-YR ALW PER 100 EQUIP ENTOCY	(10) DEPOT MAINT ALW-PER 100 EQUIP	(11) ILLUSTRATION (a) FIG NO.	(b) ITEM NO
X20 00306	5340-253-4640	CLEVIS, ROD END: LOWER ROD, BELLCRANK TO THROUGHOUT ARM, AND ROD, BELLCRANK TO BELLCRANK B (16004) 11014	EA		4									8	8
X20 00307		END: ADJUSTING YOKE, SHIFT BAR BRACKET TO SHIFT LEVER (16004) 22760	EA		1										31
0 00308	4730-279-0360	FITTING, LUBRICATION: SHIFT LEVER, SHORT END B (70276) 1641	EA		1	•	•	•	•	•	•	•	•	7	30
X20 00309		LEVER ASSEMBLY: SHIFTER DECLUTCHER (97403) 13200E0934	EA		1										
X20 00310		CLEVIS, ROD END: SHIFTER DECLUTCHER ROD, ADJUSTING (00000) 1A3245	EA		2									7	17
X20 00311		ESCUTCHEON: SHIFT LEVER GUIDE (97403) 13200E0936	EA		1									7	2
X20 00312	5355-667-6053	KNOB, LEVER: SHIFT A	EA		1									7	3
X20 00313	5805-447-3521	KNOB, LEVER, SHIFT (75376) 9442-6 B	EA		1									7	3
X20 00314		LEVER, SHIFT (97403) 13200E0937	EA		1									7	4
0 00315	5310-655-9371	NUT, PLAIN, HEXAGON: CLEVIS LOCKING AND LEVER MTG (96906) MS35690-225	EA		4	•	•	•	•	•	•	•	•	7	7
0 00316	5310-880-7785	NUT, SELF-LOCKING, HEXAGON: HAND LEVER SUPPORT MTG (96906) MS51965-11	EA		2	•	•	•	•	•	•	•	•	7	19
0 00317	5315-298-1381	PIN, COTTER: CLEVIS PIN (00000) 137200	EA		2	•	•	•	•	•	•	•	•	7	16
0 00318	5315-842-3154	PIN, STRAIGHT, HEADED: CLEVIS (96906) MS35810-36	EA		2	•	•	•	•	•	•	•	•	7	24
X20 00319		ROD: SHIFTER DECLUTCHER LEVER (97403) 13200E0935	EA		1									7	18
0 00320	5305-018-0155	SCREW, CAP, HEXAGON HEAD: HAND LEVER SUPPORT MTG (96906) MS35297-92	EA		2	•	•	•	•	•	•	•	•	7	21

(1) SMR CODE / INDEX NO.	(2) FEDERAL STOCK NUMBER	(3) DESCRIPTION — REFERENCE NO. & MFR CODE — USABLE ON CODE	(4) UNIT OF ISSUE	(5) QTY INC IN UNIT PACK	(6) QTY INC IN UNIT	(7) 30-DAY DS MAINT ALLOWANCE (a) 1-20	(b) 21-50	(c) 51-100	(8) 30-DAY GS MAINT ALLOWANCE (a) 1-20	(b) 21-50	(c) 51-100	(9) 1-YR ALW PER 100 EQUIP CNTGCY	(10) DEPOT MAINT ALW-PER 100 EQUIP	(11) ILLUSTRATION (a) FIG NO.	(b) ITEM NO.
0 00337	5315-842-3044	PIN, COTTER: SHIFTER SHOE PIN B (96906) MS24665-283	EA		1	•	•	•	•	•	•	•	•	7	13
0 00338	5315-081-7033	PIN, STRAIGHT, HEADED: CLEVIS AND SHIFTER LEVER TO SHIFTER BAR (96906) MS20392-5C27	EA		5	•	•	•	•	•	•	•	•	7	14
0 00339	5315-081-7042	PIN, STRAIGHT, HEADED: CLEVIS LEVER TO SHIFT BRACKET (96906) MS20392-7C37	EA		1	•	•	•	•	•	•	•	•	7	24
0 00340	5315-081-7033	PIN, STRAIGHT, HEADED: LOWER OPERATING ROD THROWOUT ARM CLEVIS AND LOWER BELLCRANK TO UPPER BELLCRANK B (96906) MS20392-5C27	EA		5	•	•	•	•	•	•	•	•	8	7
X20 00341		ROD, OPERATING: LOWER A (97403) 13200E0946	EA		1									8	12
X20 00342		ROD, OPERATING: LOWER B (16004) 31511	EA		1									8	12
X20 00343		ROD, OPERATING: UPPER A (97403) 13200E0950	EA		1									8	9
X20 00344		ROD, OPERATING: UPPER B (16004) 33959	EA		1									8	9
0 00345	5305-824-4767	SCREW, CAP, HEXAGON HEAD: BELLCRANK BRACKET MTG (96906) MS90726-239	EA		1	•	•	•	•	•	•	•	•	8	4
0 00346	5305-269-2805	SCREW, CAP, HEXAGON HEAD: LOWER BELLCRANK BRACKET MTG (96906) MS90726-62	EA		4	•	•	•	•	•	•	•	•	8	6
0 00347	5305-710-4191	SCREW, CAP, HEXAGON HEAD: SHIFT BRACKET MTG (96906) MS90726-86	EA		1	•	•	•	•	•	•	•	•	7	26
0 00348	5305-044-5503	SCREW, CAP, HEXAGON HEAD: SHIFT BAR BRACKET MTG (96906) MS90725-160	EA		1	•	•	•	•	•	•	•	•	7	28
0 00349	5305-269-2807	SCREW, CAP, HEXAGON HEAD: SHIFTER BAR MTG (96906) MS90726-64	EA		1	•	•	•	•	•	•	•	•	7	12
P 0 00350	4940-967-9099	SHIFTER AND SHOE ASSEMBLY: DECLUTCHER (97403) 13200E0931	EA		1	•	•	2	•	•	2	6	10	7	11
X1 00351		SHIFTER: DECLUTCHER (97403) 13200E0932	EA		1										

(1) SMR CODE / INDEX NO.	(2) FEDERAL STOCK NUMBER	(3) DESCRIPTION REFERENCE NO. & MFR. CODE — USABLE ON CODE	(4) UNIT OF ISSUE	(5) QTY INC IN UNIT PACK	(6) QTY INC IN UNIT	(7) 30-DAY DS MAINT ALLOWANCE (a) 1-20	(b) 21-50	(c) 51-100	(8) 30-DAY GS MAINT ALLOWANCE (a) 1-20	(b) 21-50	(c) 51-100	(9) 1-YR ALW PER 100 EQUIP ON TOCV	(10) DEPOT MAINT ALW PER 100 EQUIP	(11) ILLUSTRATION (a) FIG NO.	(b) ITEM NO
XPF 00367		YOKE, SLEEVE: SPLINED (74865) CC925035	EA		1									9	20
P F 00368	4940-856-3086	RETAINER, SEAL (74865) CC599252	EA		1	•	•	2	•	•	2	6	10	9	23
P F 00369		SEAL, CORK (74865) CC575709	EA		1	•	2	2	•	2	2	20	100		
P F 00370	4940-757-1880	SEAL, FELT (74865) CC563099	EA		1	•	2	2	•	2	2	20	100	9	22
XPF 00371		WASHER, SEAL (74865) CC572489	EA		2									9	21
P F 00372	4940-757-1882	UNIVERSAL JOINT AND SHAFT ASSEMBLY, SLIP (97403) 13200E0960	EA		1	•	•	•	•	•	•	2	6		
P F 00373	2520-781-1896	BEARING, ROLLER, NEEDLE (78992) 53605-1	EA		8	2	2	3	2	2	3	32	160	9	5
F 00374		BOLT, MACHINE: CROSS ASSEMBLY MTG (96906) MS35298-42	EA		2	•	•	•	•	•	•	•	•	9	26
XPF 00375	5340-757-1875	CLIP, RETAINING (78992) 536181	EA		4									9	13
F 00376	5310-880-7746	NUT, PLAIN, HEXAGON: CROSS ASSEMBLY MTG (96906) MS51968-5	EA		2	•	•	•	•	•	•	•	•	9	14
P F 00377	4940-757-1883	RETAINER (78992) 51619	EA		2	•	2	2	•	2	2	12	10	9	12
P F 00378	5340-735-1167	RING, RETAINING (78992) 53618	EA		6	•	•	•	•	•	•	•	•	9	2
P F 00379	2520-038-4518	SPIDER, UNIVERSAL JOINT (78992) 51625-1	EA		2	•	2	2	•	2	2	16	20	9	15
X1 00380		CROSS: UNIVERSAL JOINT (78992) 51625	EA		2									9	8
P F 00381	2530-735-1119	RETAINER, UNIVERSAL JOINT (78992) 51608	EA		8	7	13	27	7	13	27	320	800	9	19

(1) SMR CODE / INDEX NO.	(2) FEDERAL STOCK NUMBER	(3) DESCRIPTION REFERENCE NO. & MFR. CODE — USABLE ON CODE	(4) UNIT OF ISSUE	(5) QTY INC. IN UNIT PACK	(6) QTY INC IN UNIT	(7) 30-DAY DS MAINT ALLOWANCE (a) 1-20	(b) 21-50	(c) 51-100	(8) 30-DAY GS MAINT ALLOWANCE (a) 1-20	(b) 21-50	(c) 51-100	(9) 1-YR ALW PER 100 EQUIP ENTDCY	(10) DEPOT MAINT ALW-PER 100 EQUIP	(11) ILLUSTRATION (a) FIG NO.	(b) ITEM NO.
00393		GROUP 15 - FRAME													
00394		1501 - FRAME ASSEMBLY													
XZH 00394A		REWORK ASSEMBLY (97403) 13200E9001	EA		1									43	8
XZH 00395		BRACKET: TAILLIGHT LEFT SIDE (97403) 13200E9006-1	EA		2	SEE WP 0609									
XZH 00396		BRACKET: TRAILER RECEPTACLE (97403) 13200E9006-2	EA		1	SEE WP 0609									
XZH 00397		BRACKET, EXTENSION: TRAILER POWER PLUG (97403) 13200E9007	EA		1	SEE WP 0609									
XZH 00398		CROSSMEMBER (97403) 13200E9004	EA		1									31	2
XZH 00399	4940-888-2889	EXTENSION, FRAME (97403) 13200E9002-1	EA		1									31	1
XZH 00400	4940-888-2890	EXTENSION, FRAME (97403) 13200E9002-2	EA		1									31	4
XZH 00401		GUSSET, FRAME EXTENSION (97403) 13200E9005	EA		2									31	3
H 00402	5310-732-0846	NUT, PLAIN, HEXAGON: RELOCATING ORIGINAL TAILLIGHT HARNESS CLAMP, 1/4-28 THD SIZE (96906) MS51968-1	EA		2	SEE WP 0609									
H 00403	5310-763-8905	NUT, PLAIN, HEXAGON: SUPPORT MTG (96906) MS51968-20	EA		4				•	•	•	•	•	43	19
H 00404	5310-732-0836	NUT, PLAIN, HEXAGON: SUPPORT MTG, 1/2-20 THD SIZE (96906) MS51968-13	EA		8				•	•	•	•	•	43	12
H 00405	5305-761-4227	SCREW, CAP, HEXAGON HEAD: CENTER BODY SUPPORT MTG, 1/2-20 THD SIZE, 1 1/4 IN. LG (96906) MS90726-111	EA		4				•	•	•	•	•		
H 00406	5305-068-0506	SCREW, CAP, HEXAGON HEAD: RELOCATING ORIGINAL TAILLIGHT HARNESS CLAMP, 1/4-28 THD SIZE, 3/4 IN. LG (96906) MS90726-6	EA		2	SEE WP 0609									

(1) SMR CODE / INDEX NO.	(2) FEDERAL STOCK NUMBER	(3) DESCRIPTION — REFERENCE NO. & MFR. CODE — USABLE ON CODE	(4) UNIT OF ISSUE	(5) QTY INC IN UNIT PACK	(6) QTY INC IN UNIT	(7) 30-DAY DS MAINT ALLOWANCE (a) 1-20	(b) 21-50	(c) 51-100	(8) 30-DAY GS MAINT ALLOWANCE (a) 1-20	(b) 21-50	(c) 51-100	(9) 1-YR ALW PER MR EQUIP ENTITY	(10) DEPOT MAINT ALW PER 100 EQUIP	(11) ILLUSTRATION (a) FIG NO.	(b) ITEM NO.
X20 00A21	5340-856-7244	BRACKET, FLOOD LIGHT (97403) 13200E9118-1	EA		4									10	33
X20 00A22	5340-856-7245	BRACKET, FLOOD LIGHT (97403) 13200E9118-2	EA		4									10	32
X20 00A23		CLAMP, HOOK TYPE: ROOF TO BODY (06004) MR	EA		2									17	6
X1 00A24		PLATE, STRIKE: ROOF CLAMP (06004) DWG	EA		2									17	5
X20 00A25		CLIP, DOOR LOCK (97403) 13200E9170	EA		2									17	21
X2H 00A26		COMPARTMENT ASSEMBLY: LEFT SIDE (97403) 13200E9131	EA		1										
X2F 00A27		ANGLE, CHEST RETAINER (97403) 13200E9173	EA		1									11	17
X2F 00A28		BRACE: WHEEL HOUSE PANEL (97403) 13200E9165	EA		1									19	7
X20 00A29		BRACE ASSEMBLY: DOOR (97403) 13200E9019 (SAME AS BRACE ASSEMBLY, STOCK NO. (97403) 13200E9075, EXCEPT WHERE INDIVIDUAL COMPONENTS ARE ANNOTATED)	EA		1										
X20 00A30		BRACE ASSEMBLY: DOOR (97403) 13200E9075	EA		3										
0 00A31	5315-839-9820	PIN, COTTER: ROD TO FITTING (96906) MS24665-134	EA		1	•	•	•	•	•	•	•	•	13	19
X20 00A32		ROD AND BRACE ASSEMBLY (97403) 13200E9076	EA		1									13	15
X20 00A33		BASE: DOOR BRACE (97403) 13200E9078	EA		1										
X20 00A34		FITTING, ROD: DOOR BRACE (97403) 13200E9077	EA		1										
0 00A35		WASHER, FLAT: DOOR BRACE, 1/8 IN. THD SIZE (96906) MS27183-10	EA		1	•	•	•	•	•	•	•	•		

(1) SMR CODE / INDEX NO.	(2) FEDERAL STOCK NUMBER	(3) DESCRIPTION — REFERENCE NO. & MFR. CODE / USABLE ON CODE	(4) UNIT OF ISSUE	(5) QTY INC IN UNIT PACK	(6) QTY INC IN UNIT	(7) 30-DAY DS MAINT ALLOWANCE (a) 1-20	(b) 21-50	(c) 51-100	(8) 30-DAY GS MAINT ALLOWANCE (a) 1-20	(b) 21-50	(c) 51-100	(9) 1-YR ALW PER 100 EQUIP ON TOCY	(10) DEPOT MAINT ALW-PER 100 EQUIP	(11) ILLUSTRATION (a) FIG NO	(b) ITEM NO
X20 00436	4940-856-7250	ROD, BRACE: DOOR (97403) 13200E9079-2 (USED WITH BRACE ASSEMBLY, STOCK NO. (97403) 13200E9019 ONLY)	EA		1									13	22
X20 00437	4940-856-7251	ROD, BRACE: DOOR (97403) 13200E9079-1 (USED WITH BRACE ASSEMBLY, STOCK NO. (97403) 13200E9075 ONLY)	EA		1									13	16
0 00438	5310-087-7493	WASHER, FLAT: 5/16 IN. END SIZE (96906) MS27183-13	EA		1	•	•	•	•	•	•	•	•		
X2F 00439		BRACKET: HANGER WELDMENT (97403) 13200E9038	EA		1									10	2
X2F 00440		BRACKET: RAIL RETAINING SPRING (97403) 13200E9136	EA		2									11	1
X2F 00441		BRACKET: SPRING (97403) 13200E9166	EA		1										
X2F 00442		BRACKET: VULCANIZER MTG (97403) 13200E9169	EA		1									11	19
X2F 00443		BULKHEAD: REAR, FRONT COMPARTMENT (97403) 13200E9182-1	EA		1										
X2F 00444		CAP, ROOF: FRONT (97403) 13200E9087-1	EA		1										
X2F 00445		CAP, ROOF: REAR (97403) 13200E9017-2	EA		1										
X2F 00446		CHANNEL: TAILGATE CHAIN AND BRACKET SUPPORT (97403) 13200E9090	EA		1									14	14
X2F 00447		CLIP: COMPARTMENT (97403) 13200E9146	EA		1										
X2F 00448		CLIP, DOOR: LOCK (97403) 13200E9170	EA		1									11	12
X2F 00449		CLIP, RETAINING: COMPARTMENT (97403) 13200E9119	EA		5									10	6
X2F 00450		CLIP, RETAINING: COMPARTMENT (97403) 13200E9120	EA		1									10	7

(1) SMR CODE / INDEX NO.	(2) FEDERAL STOCK NUMBER	(3) DESCRIPTION REFERENCE NO. & MFR. CODE USABLE ON CODE	(4) UNIT OF ISSUE	(5) QTY INC IN UNIT PACK	(6) QTY INC IN UNIT	(7) 30-DAY DS MAINT ALLOWANCE (a) 1-20	(b) 21-50	(c) 51-100	(8) 30-DAY GS MAINT ALLOWANCE (a) 1-20	(b) 21-50	(c) 51-100	(9) 1-YR ALW PER 100 EQUIP CNTGCY	(10) DEPOT MAINT ALW-PER 100 EQUIP	(11) ILLUSTRATION (a) FIG NO.	(b) ITEM NO
X20 00466		PANEL: INTERIOR, SIDE DOOR (97403) 13200E9070-3	EA		1										
0 00467	5320-286-4789	RIVET, BLIND: HINGE TO BODY, DOOR LOCK MTG (96906) MS20604D6-3	EA		12	•	•	•	•	•	•	•	•	13	8
0 00468	5320-117-6852	RIVET, BLIND: HINGE TO DOOR (96906) MS20470AD6-7	EA		18	•	•	•	•	•	•	•	•	13	7
0 00469	5305-016-4405	SCREW, TAPPING, THREAD FORMING: LATCH ROD MTG (00000) 164405	EA		4	•	•	•	•	•	•	•	•	13	20
X20 00470		Z-BAR: DOOR (97403) 13200E5072-5	EA		1										
X20 00471		Z-BAR: DOOR (97403) 13200E5072-6	EA		1										
X20 00472		DOOR ASSEMBLY: FUEL ACCESS (97403) 13200E9183	EA		1										
X20 00473		CLIP, SPRING TENSION (79733) C36A25050-4	EA		1									27	9
X20 00474		DOOR: FUEL ACCESS (97403) 13200E9184	EA		1									27	10
X20 00475		HINGE: FUEL ACCESS DOOR (97403) 13200E9185	EA		1									27	6
0 00476	5320-117-6826	RIVET, SOLID: HINGE TO BODY AND DOOR, 1/8 IN. DIA X 1/4 LG (96906) MS20470AD4-4	EA		10	•	•	•	•	•	•	•	•	27	5
X20 00477		SPRING: FUEL ACCESS DOOR (97403) 13200E9171	EA		1									27	3
X20 00478		DOOR ASSEMBLY: LOWER LEFT REAR (97403) 13200E3003	EA		1									20	3
X20 00479	2540-896-7262	HINGE, DOOR (97403) 13200E9073-2	EA		1									13	26
X20 00480	2540-896-7258	LOCK ASSEMBLY, DOOR (97403) 13200E9065-2	EA		1										

(1) SMR CODE / INDEX NO.	(2) FEDERAL STOCK NUMBER	(3) DESCRIPTION — REFERENCE NO. & MFR. CODE — USABLE ON CODE	(4) UNIT OF ISSUE	(5) QTY INC IN UNIT PACK	(6) QTY INC IN UNIT	(7) 30-DAY DS MAINT ALLOWANCE (a) 1-20	(b) 21-50	(c) 51-100	(8) 30-DAY GS MAINT ALLOWANCE (a) 1-20	(b) 21-50	(c) 51-100	(9) 1-YR ALW PER 100 EQUIP CNTGCY	(10) DEPOT MAINT ALW-PER 100 EQUIP	(11) ILLUSTRATION (a) FIG NO.	(b) ITEM NO
PA1 00496		LOCK, DOOR (97403) 13200E9066	EA		1									13	10
PA1 00497		ROD, LATCH (97403) 13200E9069-1	EA		2									13	13
PA1 00498		SHIM, LATCH ROD: 0.125 IN. THK (97403) 13200E9067-1	EA		2									13	24
PA20 00499		PANEL: EXTERIOR, SIDE DOOR (97403) 13200E9071-1	EA		1										
PA20 00500		PANEL: INTERIOR, SIDE DOOR (97403) 13200E9070-1	EA		1										
PA0 00501	5320-286-4789	RIVET, BLIND: HINGE TO BODY, DOOR LOCK MTG (55906) M520600AD6-3	EA		32	•	•	•	•	•	•	•	•	13	8
PA0 00502	5320-117-6892	RIVET, BLIND: HINGE TO DOOR MTG (96906) MS20470AD6-7	EA		22	•	•	•	•	•	•	•	•	13	7
PA0 00503	5305-016-4405	SCREW, TAPPING, THREAD FORMING: LATCH ROD MTG (00000) 164405	EA		8	•	•	•	•	•	•	•	•	13	20
PA20 00504		Z-BAR: DOOR (97403) 13200E9072-1	EA		1										
PA20 00505		Z-BAR: DOOR (97403) 13200E9072-2	EA		1										
PA2F 00506		FLOOR: FRONT COMPARTMENT (97403) 13200E9085	EA		1										
PA2F 00507		FLOOR: LOWER COMPARTMENT, LH (97403) 13200E9164	EA		1										
PA2F 00508	2920-737-4862	GROMMET, RUBBER: 5/8 IN. ID, 3/16 IN. GROOVE (65909) 118833	EA		1									11	13
PA2F 00509	5325-720-9054	GROMMET, RUBBER: 3/4 IN. ID, 1/16 IN. GROOVE (96906) MS35490-20	EA		3										
PA2F 00510	4040-866-7246	LEDGE, DRIP: LEFT SIDE (97403) 13200E9111-1	EA		1									15	2

(1) SMR CODE / INDEX NO.	(2) FEDERAL STOCK NUMBER	(3) DESCRIPTION / REFERENCE NO. & MFR. CODE / USABLE ON CODE	(4) UNIT OF ISSUE	(5) QTY INC IN UNIT PACK	(6) QTY INC IN UNIT	(7) 30-DAY DS MAINT ALLOWANCE (a) 1-20	(b) 21-50	(c) 51-100	(8) 30-DAY GS MAINT ALLOWANCE (a) 1-20	(b) 21-50	(c) 51-100	(9) 1-YR ALW PER 100 EQUIP ON TOCY	(10) DEPOT MAINT ALW-PER 100 EQUIP	(11) ILLUSTRATION (a) FIG NO.	(b) ITEM NO
XDF 00526		PLATE, ACCESS: LEFT FRONT SPRING SHACKLE (97403) 13200E0986	EA		1									11	10
XDF 00527		PLATE, ACCESS: LEFT REAR SPRING SHACKLE (97403) 13200E0988	EA		1									11	6
XDO 00528		PLATE, INSTRUCTION: GENERATOR ENGAGING AND DISCHARGING (97403) 13200E0962	EA		1	SEE SPP 2210									
XDO 00529		PLATE, INSTRUCTION: THROTTLE (97403) 13200E0963 B	EA		1	SEE SPP 2210									
XDF 00530		PLATE, STRIKER (97403) 13200E9130	EA		8									10	26
F 00531		RIVET, BLIND: HINGE TO DOOR AND BODY (96906) MS20600AD6-3	EA		42	•	•	•	•	•	•	•	•	17	4
F 00532	5320-117-6829	RIVET, SOLID: RAIL RETAINING AND BASE COMPARTMENT (96906) MS20470AD4-7	EA		10	•	•	•	•	•	•	•	•	11	11
F 00533	5320-754-0992	RIVET, SOLID: SHELF AND SUPPORT TO BODY MTG (96906) MS20470AD6-7	EA		100	•	•	•	•	•	•	•	•	14	2
F 00534	5320-117-6939	RIVET, SOLID: STRIKER PLATE MTG (96906) MS20426AD3-5	EA		32	•	•	•	•	•	•	•	•	10	25
F 00535	5320-754-0992	RIVET, SOLID: WHEEL HOUSING PANEL TO BODY MTG (96906) MS20470AD6-7	EA		13	•	•	•	•	•	•	•	•	19	2
F 00536	5320-754-0992	RIVET, SOLID: WHEEL WELL MTG (96906) MS20470AD6-7	EA		20	•	•	•	•	•	•	•	•	18	4
XDO 00537		SCREEN ASSEMBLY: WELDER CONTROL PANEL, REAR (97403) 13200E9139	EA		1									14	6
F 00538	5305-984-6214	SCREW, MACHINE: ANGLE TO CHEST MTG (96906) MS35206-267	EA		1	•	•	•	•	•	•	•	•	11	18
F 00539	5305-895-0960	SCREW, TAPPING, THREAD FORMING: ACCESS PLATE AND CLIP MTG (96906) MS24629-36	EA		12	•	•	•	•	•	•	•	•	11	7
F 00540	5305-836-8476	SCREW, TAPPING, THREAD FORMING: SCREEN MTG (96906) MS24621-43	EA		10	•	•	•	•	•	•	•	•	14	7

(1) SMR CODE — INDEX NO.	(2) FEDERAL STOCK NUMBER	(3) DESCRIPTION — REFERENCE NO. & MFR. CODE — USABLE ON CODE	(4) UNIT OF ISSUE	(5) QTY INC IN UNIT PACK	(6) QTY INC IN UNIT	(7) 30-DAY DS MAINT ALLOWANCE (a) 1-20	(b) 21-50	(c) 51-100	(8) 30-DAY GS MAINT ALLOWANCE (a) 1-20	(b) 21-50	(c) 51-100	(9) 1-YR ALW PER 100 EQUIP ON TOCY	(10) DEPOT MAINT ALW-PER-100 EQUIP	(11) ILLUSTRATION (a) FIG NO.	(b) ITEM NO
X2F 00556		SPRING: COMPARTMENT (97403) 13200E9171	EA		1										
X2F 00557		SPRING: HEAVY DUTY, EXTENSION, COIL (97403) 13200E9172	EA		1									21	6
X2F 00558		SPRING: SPLASH SHIELD (97403) 13200E9168	EA		1										
X2F 00559		STIFFENER: COMPARTMENT FLOOR (97403) 13200E9086-1	EA		2										
X2F 00560		STIFFENER: COMPARTMENT FLOOR (97403) 13200E9086-3	EA		2										
X2F 00561		STIFFENER: INTERIOR, FRONT COMPARTMENT (97403) 13200E9089	EA		1										
X2F 00562		STIFFENER: INTERIOR, REAR COMPARTMENT (97403) 13200E9106	EA		1										
X2F 00563		STIFFENER, MULLION (97403) 13200E9081	EA		2										
X2F 00564		STRAP, CHEST RETAINER (97403) 13200E9160	EA		1									11	16
X2F 00565		SUPPORT, FLOOR (97403) 13200E9088-1	EA		1										
X2F 00566		SUPPORT, FLOOR (97403) 13200E9088-2	EA		1										
X2F 00567	4940-856-7247	SUPPORT, SHELF (97403) 13200E9096-1	EA		10									14	4
X2F 00568	4940-856-7255	SUPPORT, SHELF (97403) 13200E9096-3	EA		2									14	11
F 00569	5310-809-8544	WASHER, FLAT: ANGLE TO CHEST MTG (96906) MS27183-7	EA		1	•	•	•	•	•	•	•	•	11	15
X2F 00570		WHEEL WELL: LEFT SIDE (97403) 13200E9035	EA		1									18	3

(1) SMR CODE / INDEX NO.	(2) FEDERAL STOCK NUMBER	(3) DESCRIPTION REFERENCE NO. & MFR CODE — USABLE ON CODE	(4) UNIT OF ISSUE	(5) QTY INC IN UNIT PACK	(6) QTY INC IN UNIT	(7) 30-DAY DS MAINT ALLOWANCE (a) 1-20	(b) 21-50	(c) 51-100	(8) 30-DAY GS MAINT ALLOWANCE (a) 1-20	(b) 21-50	(c) 51-100	(9) 1-YR ALW PER 100 EQUIP CNTGCY	(10) DEPOT MAINT ALW-PER 100 EQUIP	(11) ILLUSTRATION (a) FIG NO	(b) ITEM NO
X20 00584		BRACKET: DRILL BOX (97403) 13200E9123	EA		1									10	30
X20 00585		BRACKET: SANDER (97403) 13200E9061	EA		1									10	28
X20 00586		BRACKET: WELDING ROD HOLDER (97403) 13200E9107	EA		9									10	34
X2F 00587		BRACKET, RETAINER (97403) 13200E9105	EA		1										
X2F 00588		BRACKET, RETAINER (97403) 13200E9108	EA		2										
X2F 00589		BULKHEAD: REAR, FRONT COMPARTMENT (97403) 13200E9082-2	EA		2										
X2F 00590		CAP, ROOF (97403) 13200E9017-1	EA		1										
X2F 00591		CAP, ROOF: FRONT (97403) 13200E9087-2	EA		1										
X2F 00592		CHANNEL: TAILGATE (97403) 13200E9090	EA		1										
X2F 00593		CLIP, RETAINING: DOOR BRACE (97403) 13200E9119	EA		8									13	2
X20 00594		CLIP: GRINDER AND DRILL RETAINER (97403) 13200E9122	EA		2									10	35
X20 00595		CLIP, RETAINING (97403) 13200E9120	EA		1										
X20 00596		CLIP, RETAINING: WELDING EQUIPMENT (97403) 13200E9118	EA		3									10	4
X20 00597		CLIP, RETAINING: WELDING EQUIPMENT (97403) 13200E9121	EA		2									10	8
X20 00598		CONTAINER: FITTINGS (97403) 13200E9126	EA		2									10	12
X20 00599		CONTAINER: SANDING DISC (97403) 13200E9115	EA		1									10	3

(1) SMR CODE / INDEX NO	(2) FEDERAL STOCK NUMBER	(3) DESCRIPTION REFERENCE NO. & MFR. CODE — USABLE ON CODE	(4) UNIT OF ISSUE	(5) QTY INC IN UNIT PACK	(6) QTY INC IN UNIT	(7) 30-DAY DS MAINT ALLOWANCE (a) 1-20	(b) 21-50	(c) 51-100	(8) 30-DAY GS MAINT ALLOWANCE (a) 1-20	(b) 21-50	(c) 51-100	(9) 1-YR ALW PER 100 EQUIP CNTGCY	(10) DEPOT MAINT ALW-PER 100 EQUIP	(11) ILLUSTRATION (a) FIG NO	(b) ITEM NO
X2F R 00451	5340-856-7237	COMPARTMENT ASSEMBLY, GAGE (97403) 13200E9151	EA		1										
X2F 00452		DOOR: GAGE COMPARTMENT (97403) 13200E9154	EA		1									11	21
X2F 00453		HINGE: GAGE COMPARTMENT DOOR (96906) MS35822-3A	EA		1									11	20
X2F 00454		LATCH: GAGE COMPARTMENT DOOR (94222) 61-10-2-0	EA		1									11	22
X2F 00455		SHELF (97403) 13200E9152	EA		2									14	13
X2F 00456		SIDE: GAGE COMPARTMENT (97403) 13200E9153	EA		1									14	12
X2F 00457		DIVIDER, SHELF: LEFT SIDE (97403) 13200E9098	EA		1									14	5
X20 00458	5340-856-7259	DOOR ASSEMBLY: FRONT DOOR, LEFT SIDE (97403) 13200E9064-2	EA		1									20	2
X20 00459	5340-856-7235	HINGE, DOOR (97403) 13200E9073-3	EA		1									13	4
X20 00460	5340-856-7261	LOCK ASSEMBLY, DOOR (97403) 13200E9065-3	EA		1										
X1 00461		CLIP, GUIDE: LATCH ROD (97403) 13200E9170	EA		2									13	23
X1 00462		LOCK, DOOR (97403) 13200E9066	EA		1									13	11
X1 00463		ROD, LATCH (97403) 13200E9069-2	EA		2									13	25
X1 00464		SHIM, LATCH ROD: 0.125 IN. THK (97403) 13200E9067-1	EA		2									13	24
X20 00465		PANEL: EXTERIOR, SIDE DOOR (97403) 13200E9071-3	EA		1										

(1) SMR CODE / INDEX NO.	(2) FEDERAL STOCK NUMBER	(3) DESCRIPTION — REFERENCE NO. & MFR. CODE — USABLE ON CODE	(4) UNIT OF ISSUE	(5) QTY INC IN UNIT PACK	(6) QTY INC IN UNIT	(7) 30-DAY DS MAINT ALLOWANCE (a) 1-20	(b) 21-50	(c) 51-100	(8) 30-DAY GS MAINT ALLOWANCE (a) 1-20	(b) 21-50	(c) 51-100	(9) 1-YR ALW PER 100 EQUIP ENTGCY	(10) DEPOT MAINT ALW-PER 100 EQUIP	(11) ILLUSTRATION (a) FIG NO.	(b) ITEM NO
X1 00A81		CLIP, GUIDE: LATCH ROD (97403) 13200E9170	EA		2									13	23
X1 00A82		LOCK, DOOR (97403) 13200E9066	EA		1									13	10
X1 00A83		ROD, LATCH (97403) 13200E9074	EA		2									13	14
X1 00A84		SHIM, LATCH ROD: 0.125 IN. THK (97403) 13200E9067-1	EA		2									13	24
X20 00A85		PANEL: EXTERIOR, SIDE DOOR (97403) 13200E9071-2	EA		1										
X20 00A86		PANEL: INTERIOR, SIDE DOOR (97403) 13200E9015	EA		1										
0 00A87	5320-582-3268	RIVET, BLIND: HINGE TO BODY, DOOR LOCK MTG (96906) MS20600AD6-3	EA		23	•	•	•	•	•	•	•	•	13	8
0 00A88	5320-117-6852	RIVET, BLIND: HINGE TO DOOR (96906) MS20470AD6-7	EA		17	•	•	•	•	•	•	•	•	13	7
0 00A89	5305-016-4405	SCREW, TAPPING, THREAD FORMING: LATCH ROD GUIDE MOUNTING (00000) 164405	EA		4	•	•	•	•	•	•	•	•	13	20
X20 00A90		Z-BAR: DOOR (97403) 13200E9072-3	EA		1										
X20 00A91		Z-BAR: DOOR (97403) 13200E9072-4	EA		1										
X20 00A92	4940-896-7225	DOOR ASSEMBLY: TOP DOOR, LEFT SIDE (97403) 13200E9064-1	EA		2									20	1
X20 00A93	2540-896-7257	HINGE, DOOR (97403) 13200E9073-1	EA		1									13	27
X20 00A94	2540-896-7239	LOCK ASSEMBLY, DOOR (97403) 13200E9065-1	EA		1										
X1 00A95		CLIP, GUIDE: LATCH ROD (97403) 13200E9170	EA		2									13	23

(1) SMR CODE / INDEX NO.	(2) FEDERAL STOCK NUMBER	(3) DESCRIPTION REFERENCE NO. & MFR. CODE — USABLE ON CODE	(4) UNIT OF ISSUE	(5) QTY INC. IN UNIT PACK	(6) QTY INC. IN UNIT	(7) 30-DAY DS MAINT ALLOWANCE (a) 1-20	(b) 21-50	(c) 51-100	(8) 30-DAY GS MAINT ALLOWANCE (a) 1-20	(b) 21-50	(c) 51-100	(9) 1-YR ALW PER 100 EQUIP ON TOCY	(10) DEPOT MAINT ALW-PER 100 EQUIP	(11) ILLUSTRATION (a) FIG NO.	(b) ITEM NO
X2F 00511	5340-856-7256	LEDGE, DRIP: RIGHT SIDE (97403) 13200E9111-2	EA		1									15	11
X2F 00512	5340-856-7236	HOLDING SPLASH: FRONT DOORS LEFT SIDE DOOR HINGE (97403) 13200E9124-3	EA		1									13	5
X2F 00513	5340-856-7243	HOLDING SPLASH: DOOR HINGE, TOP DOORS LEFT SIDES (97403) 13200E9124-2	EA		2									13	12
X2F 00514	5340-856-7242	HOLDING SPLASH: LEFT DOOR HINGE (97403) 13200E9124-1	EA		1									13	21
X2F 00515		MOUNT: CONTROL PANEL (97403) 13200E9158	EA		1										
X2F 00516		MULLION: LOWER COMPARTMENT (97403) 13200E9103-2	EA		1										
X2F 00517		MULLION: REAR, CENTER COMPARTMENT (97403) 13200E9093	EA		1										
X2F 00518		MULLION: REAR, FRONT COMPARTMENT (97403) 13200E9083-2	EA		1										
F 00519	5310-012-0361	NUT, PLAIN, HEXAGON: ANGLE TO CHEST MTG (96906) MS35649-102	EA		2	•	•	•	•	•	•	•	•	11	14
X2F 00520		PANEL: CENTER COMPARTMENT (97403) 13200E9092-1	EA		1										
X2F 00521		PANEL: FRONT, LH (97403) 13200E9157	EA		1										
X2F 00522		PANEL: FRONT, REAR COMPARTMENT, LH (97403) 13200E9163	EA		1										
X2F 00523		PANEL: REAR, LH (97403) 13200E9162	EA		1										
X2F 00524		PANEL: ROOF (97403) 13200E9110-2	EA		1										
X2F 00525		PANEL: WHEEL HOUSING, LH (97403) 13200E9167	EA		1									19	6

SF

(1) SMR CODE / INDEX NO	(2) FEDERAL STOCK NUMBER	(3) DESCRIPTION REFERENCE NO. & MFR. CODE — USABLE ON CODE	(4) UNIT OF ISSUE	(5) QTY INC IN UNIT PACK	(6) QTY INC IN UNIT	(7) 30-DAY DS MAINT ALLOWANCE (a) 1-20	(b) 21-30	(c) 31-100	(8) 30-DAY GS MAINT ALLOWANCE (a) 1-20	(b) 21-50	(c) 51-100	(9) 1-YR ALW PER 100 EQUIP CONTGCY	(10) DEPOT MAINT ALW-PER 100 EQUIP	(11) ILLUSTRATION (a) FIG NO.	(b) ITEM NO
X2F 00541	4040-856-7238	SEAL, HINGE: LEFT SIDE (97403) 13200E9125-1	EA		4									13	26
X2F 00542		SHELF: UPPER REAR COMPARTMENT (97403) 13200E9116-2	EA		1										
X2F 00543	4040-856-7249	SHELF, FLANGED: COMPARTMENT (97403) 13200E9095-1	EA		3									14	3
X2F 00544	4040-856-7253	SHELF, FLANGED: COMPARTMENT (97403) 13200E9095-3	EA		1									14	10
X2F 00545	4040-856-7248	SHELF, FLANGED: COMPARTMENT (97403) 13200E9095-4	EA		1									14	9
X2F 00546	4040-856-7254	SHELF, FLANGED: COMPARTMENT (97403) 13200E9095-5	EA		1									14	1
X2F 00547		SHIELD ASSEMBLY: SPLASH (97403) 13200E9147	EA		1										
X2F 00548		BRACKET: SPRING TO BODY AND SPLASH SHIELD (97403) 13200E9150	EA		2									11	8
X2F 00549	4040-856-7252	HINGE, SHIELD (97403) 13200E9073-4	EA		1									19	4
F 00550	5320-754-0992	RIVET, SOLID: UPPER SHIELD TO BODY AND HINGE TO SHIELD (96906) MS20470AD6-7	EA		33	*	*	*	*	*	*	*	*	14	8
X2F 00551		SHIELD, BOTTOM: SPLASH (97403) 13200E9149	EA		1									19	5
X2F 00552		SHIELD, TOP: SPLASH (97403) 13200E9148	EA		1									19	3
X2F 00553		SPRING: SPLASH SHIELD (97403) 13200E9168	EA		1									11	9
X2F 00554		SILL: CENTER THRU REAR COMPARTMENT (97403) 13200E9098-2	EA		1										
X2F 00555		SPACER: TOOL BOX MTG, 2 7/8 IN. HIGH, 13 IN. LG, 1 1/2 IN. W (97403) 13200E9159	EA		2									21	3

(1) SMR CODE / INDEX NO.	(2) FEDERAL STOCK NUMBER	(3) DESCRIPTION REFERENCE NO. & MFR. CODE — USABLE ON CODE	(4) UNIT OF ISSUE	(5) QTY INC. IN UNIT PACK	(6) QTY INC. IN UNIT	(7) 30-DAY DS MAINT ALLOWANCE (a) 1-20	(b) 21-50	(c) 51-100	(8) 30-DAY GS MAINT ALLOWANCE (a) 1-20	(b) 21-50	(c) 51-100	(9) 1-YR ALW PER 100 EQUIP ENTOCY	(10) DEPOT MAINT ALW-PER 100 EQUIP	(11) ILLUSTRATION (a) FIG. NO.	(b) ITEM NO.
X2H 00571		COMPARTMENT ASSEMBLY: RIGHT SIDE (97403) 13200E9034	EA		1										
X20 00572		BRACE ASSEMBLY: DOOR (97403) 13200E9019 (SAME AS BRACE ASSEMBLY, STOCK NO. (97403) 13200E9075, EXCEPT WHERE INDIVIDUAL COMPONENTS ARE ANNOTATED)	EA		1										
X20 00573		BRACE ASSEMBLY: DOOR (97403) 13200E9075	EA		1										
0 00574	5315-839-5280	PIN, COTTER: ROD TO FITTING (96906) MS24665-134	EA		1	•	•	•	•	•	•	•	•	13	19
X20 00575		ROD AND BRACE ASSEMBLY (97403) 13200E9076	EA		1									13	15
X20 00576		BASE: DOOR BRACE (97403) 13200E9078	EA		1										
X20 00577		FITTING, ROD: DOOR BRACE (97403) 13200E9077	EA		1										
X20 00578		WASHER, FLAT: DOOR BRACE, 1/4 IN. THD SIZE (96906) MS27183-10	EA		1										
X20 00579	1440-896-7250	ROD, BRACE: DOOR (97403) 13200E9079-2 (USED WITH BRACE ASSEMBLY, STOCK NO. (97403) 13200E9019 ONLY)	EA		1									13	22
X20 00580	1440-896-7251	ROD, BRACE: DOOR (97403) 13200E9079-1 (USED WITH BRACE ASSEMBLY, STOCK NO. (97403) 13200E9075 ONLY)	EA		1									13	16
X20 00581	5310-087-7493	WASHER, FLAT: 5/16 IN. THD SIZE (96906) MS27183-13	EA		1										
X20 00582		BRACKET: ACETYLENE TANK (97403) 13200E9042	EA		1									10	13
X20 00583		BRACKET: DRILL (97403) 13200E9099	EA		1									10	29

(1) SMR CODE / INDEX NO.	(2) FEDERAL STOCK NUMBER	(3) DESCRIPTION — REFERENCE NO. & MFR. CODE — USABLE ON CODE	(4) UNIT OF ISSUE	(5) QTY INC IN UNIT PACK	(6) QTY INC IN UNIT	(7) 30-DAY DS MAINT ALLOWANCE (a) 1-20	(b) 21-50	(c) 51-100	(8) 30-DAY GS MAINT ALLOWANCE (a) 1-20	(b) 21-50	(c) 51-100	(9) 1-YR ALLOW PER 100 EQUIP ENTOCV	(10) DEPOT MAINT ALLOW PER 100 EQUIP	(11) ILLUSTRATION (a) FIG NO.	(b) ITEM NO
X2F 00600		DIVIDER, SHELF: RIGHT SIDE (97403) 13200E9098	EA		1									15	8
X20 00601	1730-896-7259	DOOR ASSEMBLY: FRONT DOORS, RIGHT SIDE (97403) 13200E9064-2	EA		1									20	2
X20 00602	2530-896-7235	HINGE, DOOR (97403) 13200E9073-3	EA		1									13	4
X20 00603	2530-896-7261	LOCK ASSEMBLY, DOOR (97403) 13200E9065-3	EA		1										
X1 00604		CLIP, GUIDE: LATCH ROD (97403) 13200E9170	EA		2									13	23
X1 00605		LOCK, DOOR (97403) 13200E9066	EA		1									13	11
X1 00606		ROD, LATCH (97403) 13200E9069-2	EA		2									13	25
X1 00607		SHIM, LATCH ROD: 0.125 IN. THK (97403) 13200E9067-1	EA		2									13	24
X20 00608		PANEL: EXTERIOR, SIDE DOOR (97403) 13200E9071-3	EA		1										
X20 00609		PANEL: INTERIOR, SIDE DOOR (97403) 13200E9070-3	EA		1										
0 00610	5320-117-6852	RIVET, BLIND: HINGE TO DOOR (96906) MS20470AD6-7	EA		18	•	•	•	•	•	•	•	•	13	7
0 00611	5320-896-4769	RIVET, BLIND: HINGE TO BODY AND DOOR LOCK STD (96906) MS20600AD6-3	EA		12	•	•	•	•	•	•	•	•	13	8
0 00612	5305-016-4809	SCREW, TAPPING, THREAD FORMING: LATCH DOOR ROD (00000) 19809	EA		4	•	•	•	•	•	•	•	•	13	20
X20 00613		Z-BAR: DOOR (97403) 13200E9072-5	EA		1										
X20 00614		Z-BAR: DOOR (97403) 13200E9072-6	EA		1										
X20 00615		DOOR ASSEMBLY: LOWER, LEFT REAR (97403) 13200E9003	EA		1									20	3

(1) SMR CODE — INDEX NO.	(2) FEDERAL STOCK NUMBER	(3) DESCRIPTION — REFERENCE NO. & MFR. CODE — USABLE ON CODE	(4) UNIT OF ISSUE	(5) QTY INC IN UNIT PACK	(6) QTY INC IN UNIT	(7) 30-DAY DS MAINT ALLOWANCE (a) 1-20	(b) 21-50	(c) 51-100	(8) 30-DAY GS MAINT ALLOWANCE (a) 1-20	(b) 21-50	(c) 51-100	(9) 1-YR ALW PER 100 EQUIP CNTGCY	(10) DEPOT MAINT ALW-PER 100 EQUIP	(11) ILLUSTRATION (a) FIG NO.	(b) ITEM NO
X20 00616	2540-856-7262	HINGE, DOOR (97403) 13200E9073-2	EA		1									13	28
X20 00617	2540-856-7258	LOCK ASSEMBLY, DOOR (97403) 13200E9069-2	EA		1										
X1 00618		CLIP, GUIDE: LATCH ROD (97403) 13200E9170	EA		2									13	23
X1 00619		LOCK, DOOR (97403) 13200E9066	EA		1									13	10
X1 00620		ROD, LATCH (97403) 13200E9074	EA		2									13	14
X1 00621		SHIM, LATCH ROD: 0.125 IN. THK (97403) 13200E9067-1	EA		2									13	24
X20 00622		PANEL: EXTERIOR, SIDE DOOR (97403) 13200E9071-2	EA		1										
X20 00623		PANEL: INTERIOR, SIDE DOOR (97403) 13200E9015	EA		1										
0 00624	5320-582-3268	RIVET, BLIND: HINGE TO BODY AND DOOR LOCK MTG (96906) MS20600AD6-3	EA		23	•	•	•	•	•	•	•	•	13	8
0 00625	5320-117-6852	RIVET, BLIND: HINGE TO DOOR (96906) MS20470AD6-7	EA		17	•	•	•	•	•	•	•	•	13	7
0 00626	5305-016-1405	SCREW, TAPPING, THREAD FORMING: LATCH ROD GUIDE MOUNTING (00000) 164405	EA		4	•	•	•	•	•	•	•	•	13	20
X20 00627		Z-BAR: DOOR (97403) 13200E9072-3	EA		1										
X20 00628		Z-BAR: DOOR (97403) 13200E9072-4	EA		1										
X20 00629	2540-856-7225	DOOR ASSEMBLY: TOP DOORS, RIGHT SIDE (97403) 13200E9064-1	EA		2									20	1
X20 00630	2540-856-7257	HINGE, DOOR (97403) 13200E9073-1	EA		1									13	27

(1) SMR CODE / INDEX NO.	(2) FEDERAL STOCK NUMBER	(3) DESCRIPTION — REFERENCE NO. & MFR. CODE — USABLE ON CODE	(4) UNIT OF ISSUE	(5) QTY INC IN UNIT PACK	(6) QTY INC IN UNIT	(7) 30-DAY DS MAINT ALLOWANCE (a) 1-20	(b) 21-50	(c) 51-100	(8) 30-DAY GS MAINT ALLOWANCE (a) 1-20	(b) 21-50	(c) 51-100	(9) 1-YR ALW PER 100 EQUIP ON TGCY	(10) DEPOT MAINT ALW-PER 100 EQUIP	(11) ILLUSTRATION (a) FIG NO.	(b) ITEM NO.
X20 00646		BRACKET: WELDING HOSE HANGER (97403) 13200E9050	EA		1									10	9
X1 00647		CHANNEL: WELDING HOSE HANGER (97403) 13200E9048	EA		1										
X20 00648		PLATE: WELDING HOSE BRACKET (97403) 13200E9049	EA		1									10	10
0 00649	5320-117-6854	RIVET, SOLID: PLATE TO CHANNEL (96906) MS20470AD6-9	EA		2	•	•	•	•	•	•	•	•	10	11
X2F 00650		HANGER, BRACKET (97403) 13200E9038	EA		4										
X20 00651	4940-888-2891	GUIDE, CYLINDER RETAINER (97403) 13200E9101-1	EA		1									10	17
X20 00652	4940-888-2892	GUIDE, CYLINDER RETAINER (97403) 13200E9101-2	EA		1									10	15
X2F 00653	4940-856-7246	LEDGE, DRIP (97403) 13200E9111-1	EA		1										
X2F 00654	4940-856-7256	LEDGE, DRIP (97403) 13200E9111-2	EA		1										
X20 00655	5340-093-5564	LOOP, STRAP-FASTENER: GREASE GUN (00000) 8328A23	EA		22									10	24
X20 00656	5340-093-5564	LOOP, STRAP-FASTENER: TOOL CHEST RETAINING (00000) 8328A23	EA		2									11	24
X2F 00657	4940-856-7242	MOULDING, SPLASH: VERTICAL (97403) 13200E9124-1	EA		1										
X2F 00658	4940-856-7243	MOULDING, SPLASH: VERTICAL (97403) 13200E9124-2	EA		2										
X2F 00659	4940-856-7236	MOULDING, SPLASH: VERTICAL (97403) 13200E9124-3	EA		1										
X2F 00660		MOULDING: LOWER COMPARTMENT (97403) 13200E9103-1	EA		1										

(1) SMR CODE / INDEX NO.	(2) FEDERAL STOCK NUMBER	(3) DESCRIPTION — REFERENCE NO. & MFR. CODE — USABLE ON CODE	(4) UNIT OF ISSUE	(5) QTY INC IN UNIT PACK	(6) QTY INC IN UNIT	(7) 30-DAY DS MAINT ALLOWANCE (a) 1-20	(b) 21-50	(c) 51-100	(8) 30-DAY GS MAINT ALLOWANCE (a) 1-20	(b) 21-50	(c) 51-100	(9) 1-YR ALW PER 100 EQUIP CNTGCY	(10) DEPOT MAINT ALW-PER 100 EQUIP	(11) ILLUSTRATION (a) FIG NO.	(b) ITEM NO
X2F 00676		SHELF: UPPER, REAR COMPARTMENT (97403) 13200E9116-1	EA		1										
X2F 00677	4940-856-7249	SHELF, FLANGED (97403) 13200E9095-1	EA		3									15	4
X2F 00678	4940-856-7248	SHELF, FLANGED: RIGHT SIDE (97403) 13200E9095-2	EA		1									15	9
X2F 00679		SILL: CENTER THRU REAR COMPARTMENT (97403) 13200E9094-1	EA		1										
X2F 00680		STIFFENER: COMPARTMENT FLOOR (97403) 13200E9086	EA		2										
X2F 00681		STIFFENER: COMPARTMENT FLOOR (97403) 13200E9086-2	EA		2										
X2F 00682		STIFFENER: INTERIOR, FRONT COMPARTMENT (97403) 13200E9089	EA		1										
X2F 00683		STIFFENER: INTERIOR, FRONT COMPARTMENT (97403) 13200E9020	EA		1										
X2F 00684		STIFFENER: INTERIOR, REAR COMPARTMENT (97403) 13200E9106	EA		1										
X2F 00685		STIFFENER, ANGLE: RH, FRONT COMPARTMENT (97403) 13200E9084	EA		1										
X2F 00686		STIFFENER, MULLION (97403) 13200E9081	EA		2										
X20 00687	5340-633-7334	STRAP: AIR COMPRESSOR AND TOOL BOX MTG (00000) 592639	EA		4									42	9
X20 00688	5340-505-6393	STRAP, WEBBING: FLARING TOOL KIT (00000) 592637	EA		1									42	10
X20 00689	5340-613-2987	STRAP, WEBBING: GREASE AND OIL SUCTION GUN MTG (00000) 592638	EA		2									42	8
X20 00690	5340-506-1511	STRAP, WEBBING: HEAVY DUTY SOCKET SET MTG (00000) 592640	EA		2									42	7

(1) SMR CODE / INDEX NO.	(2) FEDERAL STOCK NUMBER	(3) DESCRIPTION / REFERENCE NO. & MFR. CODE / USABLE ON CODE	(4) UNIT OF ISSUE	(5) QTY INC IN UNIT PACK	(6) QTY INC IN UNIT	(7) 30-DAY DS MAINT ALLOWANCE (a) 1-20	(b) 21-50	(c) 51-100	(8) 30-DAY GS MAINT ALLOWANCE (a) 1-20	(b) 21-50	(c) 51-100	(9) 1-YR ALW PER 100 EQUIP CNTGCY	(10) DEPOT MAINT ALW-PER-100 EQUIP	(11) ILLUSTRATION (a) FIG NO.	(b) ITEM NO
X1 00705	5340-062-8676	PLATE: DOOR LOCK (97403) 13200E9067-2	EA		2									17	16
X. 00706		PLATE, LATCH ROD (97403) 13200E9067-1	EA		2									17	15
X1 00707		ROD, LATCH (97403) 13200E9069-1	EA		2									17	18
X1 00708		ROD, LATCH (97403) 13200E9069-3	EA		2									17	19
X20 00709		PANEL: REAR DOOR, EXTERIOR (97403) 13200E9030	EA		1										
X20 00710		PANEL: REAR DOOR, EXTERIOR (97403) 13200E9232	EA		1										
X20 00711		PANEL: REAR DOOR, INTERIOR (97403) 13200E9229	EA		1										
X20 00712		PANEL: REAR DOOR, INTERIOR (97403) 13200E9231	EA		1										
O 00713	5305-016-4359	SCREW, TAPPING, THREAD FORMING: ACCESS PLATE MTG (00000) 164359	EA		8	•	•	•	•	•	•	•	•	10	20
O 00714	5305-016-4359	SCREW, TAPPING, THREAD FORMING: CELLAR WINDOW LOCK MOUNTING (00000) 164359	EA		8	•	•	•	•	•	•	•	•	17	14
X20 00715		SUPPORT: DOOR TO BODY (97403) 13200E9018 (USED ON DOOR ASSEMBLY, STOCK NO. (97403) 13200E9228-2 ONLY)	EA		1									11	5
X20 00716		SUPPORT: DOOR TO BODY (97403) 13200E9233 (USED ON DOOR ASSEMBLY, STOCK NO. (97403) 13200E9228-1 ONLY)	EA		1									10	40
X2N 00717		FLOOR ASSEMBLY (97403) 13200E9177	EA		1										
X2N 00718		BODY ASSEMBLY: POWER TAKE-OFF SUPPORT (97403) 13200E9178	EA		1	SEE SMP 2004									

(1) SMR CODE / INDEX NO.	(2) FEDERAL STOCK NUMBER	(3) DESCRIPTION / REFERENCE NO. & MFR. CODE / USABLE ON CODE	(4) UNIT OF ISSUE	(5) QTY INC IN UNIT PACK	(6) QTY INC IN UNIT	(7) 30-DAY DS MAINT ALLOWANCE (a) 1-20	(b) 21-50	(c) 51-100	(8) 30-DAY GS MAINT ALLOWANCE (a) 1-20	(b) 21-50	(c) 51-100	(9) 1-YR ALW PER 100 EQUIP ON TGCY	(10) DEPOT MAINT ALW-PER 100 EQUIP	(11) ILLUSTRATION (a) FIG NO.	(b) ITEM NO
M O 00734		GASKET: LEFT AND RIGHT REAR ACCESS PLATES	EA		2									10	37
		MANUFACTURE FROM:													
P O 00735	5330-202-4061	RUBBER SHEET, SOLID	FT			SEE SPP 9501									
		(10 IN. BY 8 IN. REQUIRED FOR EACH GASKET)													
X2F 00736	5325-281-1557	GROMMET, RUBBER (96906) MS35489-17	EA		1									22	1
X20 00737		LATCH ASSEMBLY: TAILGATE (97403) 13200E5236	EA		2										
X1 00738		BRACKET, LATCH: TAILGATE (97403) 13200E5241	EA		2									12	25
X20 00739		LATCH, TAILGATE (97403) 13200E5237	EA		2									12	26
O 00740	5315-842-3044	PIN, COTTER: TAILGATE LATCH (96906) MS24665-283	EA		2	•	•	•	•	•	•	•	•	12	23
X20 00741		SPRING, LATCH: TAILGATE (97403) 13200E5240	EA		2									12	21
O 00742	5310-809-4061	WASHER, FLAT: TAILGATE LATCH (96906) MS27183-15	EA		2	•	•	•	•	•	•	•	•	12	22
O 00743	5310-761-6882	NUT, PLAIN, HEXAGON: BLOCK MTG (96906) MS51967-2	EA		4	•	•	•	•	•	•	•	•	21	5
O 00744	5310-298-2747	NUT, PLAIN, HEXAGON: BRACE ASSEMBLY MTG (96906) MS20970-428	EA		16	•	•	•	•	•	•	•	•	13	17
O 00745	5310-761-6882	NUT, PLAIN, HEXAGON: CHAIN BRACKET TO BODY (96906) MS51967-2	EA		4	•	•	•	•	•	•	•	•	12	20
O 00746	5310-761-6882	NUT, PLAIN, HEXAGON: OXYGEN RACK (96906) MS51967-2	EA		9	•	•	•	•	•	•	•	•	16	1
F 00747	5310-012-0361	NUT, PLAIN, HEXAGON: RECEPTACLE BOX MTG (96906) MS35649-102	EA		4	•	•	•	•	•	•	•	•	22	10
O 00748	5310-732-0550	NUT, PLAIN, HEXAGON: RETAINER TO BRACKET (96906) MS51967-8	EA		2	•	•	•	•	•	•	•	•	10	19

(1) SMR CODE — INDEX NO.	(2) FEDERAL STOCK NUMBER	(3) DESCRIPTION — REFERENCE NO. & MFR. CODE — USABLE ON CODE	(4) UNIT OF ISSUE	(5) QTY INC IN UNIT PACK	(6) QTY INC IN UNIT	(7) 30-DAY DS MAINT ALLOWANCE (a) 1-20	(b) 21-30	(c) 31-100	(8) 30-DAY GS MAINT ALLOWANCE (a) 1-20	(b) 21-50	(c) 51-100	(9) 1-YR ALW PER 100 EQUIP IN TOCY	(10) DEPOT MAINT ALW-PER 100 EQUIP	(11) ILLUSTRATION (a) FIG NO.	(b) ITEM NO.
X20 00631	2540-896-7239	LOCK ASSEMBLY, DOOR (97403) 13200E9065-1	EA		1										
X1 00632		CLIP, GUIDE: LATCH ROD (97403) 13200E9170	EA		2									13	23
X1 00633		LOCK, DOOR (97403) 13200E9066	EA		1									13	10
X1 00634		ROD, LATCH (97403) 13200E9069-1	EA		2									13	13
X1 00635		SHIM, LATCH ROD: 0.125 IN. THK (97403) 13200E9067-1	EA		2									13	24
X20 00636		PANEL: EXTERIOR, SIDE DOOR (97403) 13200E9071-1	EA		1										
X20 00637		PANEL: INTERIOR, SIDE DOOR (97403) 13200E9070-1	EA		1										
O 00638	5320-286-4389	RIVET, BLIND: HINGE TO BODY, AND DOOR LOCK MTG (96906) MS20600AD6-3	EA		32	•	•	•	•	•	•	•	•	13	8
O 00639	5320-117-6892	RIVET, BLIND: HINGE TO DOOR MTG (96906) MS20470AD6-7	EA		22	•	•	•	•	•	•	•	•	13	7
O 00640	5305-016-4405	SCREW, TAPPING, THREAD FORMING: LATCH ROD MTG (00000) 16405	EA		8	•	•	•	•	•	•	•	•	13	20
X20 00641		Z-BAR: DOOR (97403) 13200E9072-1	EA		1										
X20 00642		Z-BAR: DOOR (97403) 13200E9072-2	EA		1										
X2F 00643		FLOOR: FRONT COMPARTMENT (97403) 13200E9075	EA		1										
X2F 00644		FLOOR: LOWER, REAR COMPARTMENT (97403) 13200E910A	EA		1										
X20 00645		HANGER ASSEMBLY: WELDING HOSE (97403) 13200E90A7	EA		1										

(1) SMR CODE / INDEX NO.	(2) FEDERAL STOCK NUMBER	(3) DESCRIPTION REFERENCE NO. & MFR. CODE — USABLE ON CODE	(4) UNIT OF ISSUE	(5) QTY INC IN UNIT PACK	(6) QTY INC IN UNIT	(7) 30-DAY DS MAINT ALLOWANCE (a) 1-20	(b) 21-50	(c) 51-100	(8) 30-DAY GS MAINT ALLOWANCE (a) 1-20	(b) 21-50	(c) 51-100	(9) 1-YR ALW PER 100 EQUIP QTY/QTY	(10) DEPOT MAINT ALW-PER 100 EQUIP	(11) ILLUS-TRATION (a) FIG NO.	(b) ITEM NO
X2F 00661		MULLION: REAR, CENTER COMPARTMENT (97403) 13200E9093	EA		1										
X2F 00662		MULLION: REAR, FRONT COMPARTMENT (97403) 13200E9083-1	EA		1										
X2F 00663		PANEL: CENTER COMPARTMENT (97403) 13200E9092-2	EA		1										
X2F 00664		PANEL: FORWARD, RIGHT SIDE (97403) 13200E9060	EA		1										
X2F 00665		PANEL: REAR, RIGHT SIDE (97403) 13200E9100	EA		1										
X2F 00666		PANEL: RH, LOWER COMPARTMENT (97403) 13200E9102	EA		1										
X2F 00667		PANEL, ROOF (97403) 13200E9110-1	EA		1										
X2F 00668		PANEL, WHEEL HOUSE: RH (97403) 13200E9109	EA		1									15	10
X2D 00669		PLATE, ACCESS: RIGHT REAR SPRING SHACKLE (97403) 13200E0987	EA		1									10	23
X2F 00670		PLATE, ACCESS: SPRING SHACKLE, RIGHT FRONT (97403) 13200E0986	EA		1									10	21
X2F 00671		PLATE, STRIKER (97403) 13200E9130	EA		8										
X2F 00672		RETAINER: ACETYLENE CYLINDER (97403) 13200E9112	EA		1										
X2F 00673		RETAINER, TAPE: VELOMENT, BOTTOM (97403) 13200E9051	EA		1									15	7
F 00674	5320-660-1281	RIVET, SOLID: 3/16 IN. DIA, 5/8 IN. LG (96906) MS20426AD6-10	EA		2	•	•	•	•	•	•	•	•		
X2D 00675	5340-856-7260	SEAL, HINGE: RIGHT SIDE (97403) 13200E9125-2	EA		4									13	3

(1) SMR CODE / INDEX NO	(2) FEDERAL STOCK NUMBER	(3) DESCRIPTION — REFERENCE NO. & MFR. CODE / USABLE ON CODE	(4) UNIT OF ISSUE	(5) QTY INC IN UNIT PACK	(6) QTY INC IN UNIT	(7) 30-DAY DS MAINT ALLOWANCE (a) 1-20	(b) 21-50	(c) 51-100	(8) 30-DAY GS MAINT ALLOWANCE (a) 1-20	(b) 21-50	(c) 51-100	(9) 1-YR ALW PER 100 EQUIP ON TOCY	(10) DEPOT MAINT ALW-PER 100 EQUIP	(11) ILLUSTRATION (a) FIG NO	(b) ITEM NO
X2F 00691		STUD PLATE, DRILL BRACKET (97403) 13200E9008	EA		1										
X2F 00692		SUPPORT, FLOOR (97403) 13200E9088-1	EA		1										
X2F 00693		SUPPORT, FLOOR (97403) 13200E9088-2	EA		1										
X2F 00694	4940-856-7247	SUPPORT, SHELF (97403) 13200E9096-1	EA		8									15	5
X2F 00695		WELL, WHEEL: LEFT SIDE (97403) 13200E9035	EA		1										
X2F 00696		CONNECTOR, ANGLE TITLE BITE: FOR ARMORED CABLE, 1/2 IN. TRADE SIZE (59730) 10382	EA		1									22	7
M F 00697		DISC, PLYWOOD: TANK BASE	EA		1									15	6
		MANUFACTURE FROM:													
P F 00698	5530-129-2123	PLYWOOD (13 IN. DIA REQUIRED)	FT			SEE GRP 9501									
X20 00699	4940-888-2895	DOOR ASSEMBLY: LEFT REAR (97403) 13200E9228-2 (SAME AS DOOR ASSEMBLY, STOCK NO. 4940-856-7226, EXCEPT WHERE INDIVIDUAL COMPONENTS ARE ANNOTATED)	EA		1									17	20
X20 00700	4940-856-7226	DOOR ASSEMBLY: RIGHT REAR (97403) 13200E9228-1	EA		1									17	9
X20 00701	4940-961-9098	BOLT, CELLAR WINDOW: DOOR TO TAILGATE LOCK (72968) 1403J	EA		2									17	13
X20 00702	2540-856-7223	HINGE, DOOR (97403) 13200E9073-5	EA		2									17	8
X20 00703	2540-856-7240	LOCK ASSEMBLY, DOOR (97403) 13200E9065-4	EA		2									17	10
X1 00704		LOCK, DOOR (97403) 13200E9066	EA		1									17	11

(1) SMR CODE / INDEX NO.	(2) FEDERAL STOCK NUMBER	(3) DESCRIPTION REFERENCE NO. & MFR. CODE — USABLE ON CODE	(4) UNIT OF ISSUE	(5) QTY INC. IN UNIT PACK	(6) QTY INC. IN UNIT	(7) 30-DAY DS MAINT ALLOWANCE (a) 1-20	(b) 21-50	(c) 51-100	(8) 30-DAY GS MAINT ALLOWANCE (a) 1-20	(b) 21-50	(c) 51-100	(9) 1-YR ALW PER 100 EQUIP ON TCCY	(10) DEPOT MAINT ALW-PER-100 EQUIP	(11) ILLUSTRATION (a) FIG NO.	(b) ITEM NO
X2H 00719	4940-888-2893	CHANNEL, REINFORCING (97403) 13200E9189-1	EA		1									18	14
X2H 00720	4940-888-2894	CHANNEL, REINFORCING (97403) 13200E9189-2	EA		1									18	13
X2H 00721		CROSSMEMBER: FRONT (97403) 13200E9186	EA		1									18	22
X2H 00722		CROSSMEMBER: FRONT INTERMEDIATE (97403) 13200E9187	EA		1									18	21
X2H 00723		CROSSMEMBER: WHEELHOUSE (97403) 13200E9188	EA		1									18	20
X2F 00724		CROSSMEMBER, REAR (97403) 13200E9190	EA		1									18	12
X2H 00725		FLOOR (97403) 13200E9185	EA		1									18	1
X20 00726		HINGE: ACCESS PLATE (97403) 13200E9195	EA		4									21	18
X20 00727		PLATE, ACCESS, HINGED: LIFTING HOOKS (97403) 13200E9192	EA		2									21	15
X20 00728		PLATE, INSPECTION: FUEL GAGE SENDING ELEMENT (97403) 13200E9191	EA		1									21	20
X20 00729		SPACER: HINGE TO ACCESS DOOR (97403) 13200E9010	EA		8									21	19
X2F 00730		STOP, ACCESS PLATE: REAR (97403) 13200E9193	EA		4									18	23
X2F 00731		STOP, INSPECTION PLATE: FUEL GAGE SENDING ELEMENT (97403) 13200E9194	EA		2									18	9
H 0 00732		GASKET: ACCESS PLATE, LEFT AND RIGHT FRONT	EA		2									10	22
		MANUFACTURE FROM:													
P 0 00733	5330-202-4061	RUBBER SHEET, SOLID	FT			SEE GRP 9901									
		(6 IN. BY 6 IN. REQUIRED FOR EACH GASKET)													

(1) SMR CODE / INDEX NO.	(2) FEDERAL STOCK NUMBER	(3) DESCRIPTION REFERENCE NO. & MFR. CODE — USABLE ON CODE	(4) UNIT OF ISSUE	(5) QTY INC IN UNIT PACK	(6) QTY INC IN UNIT	(7) 30-DAY DS MAINT ALLOWANCE (a) 1-20	(b) 21-50	(c) 51-100	(8) 30-DAY GS MAINT ALLOWANCE (a) 1-20	(b) 21-50	(c) 51-100	(9) 1-YR ALW PER 100 EQUIP ENTGCY	(10) DEPOT MAINT ALW-PER 100 EQUIP	(11) ILLUS-TRATION (a) FIG NO.	(b) ITEM NO.
F 00749	5310-761-6782	NUT, PLAIN, HEXAGON: STRAP MTG (96906) MS51967-2	EA		5	•	•	•	•	•	•	•	•	22	6
O 00750	5310-761-6782	NUT, PLAIN, HEXAGON: TAILGATE HINGE AND LATCH TO BODY (96906) MS51967-2	EA		16	•	•	•	•	•	•	•	•		
O 00751	5310-625-1429	NUT, PLAIN, HEXAGON: HINGE TO TAILGATE (96906) MS51967-14	EA		3	•	•	•	•	•	•	•	•	12	1
F 00752	5310-[illegible]-6878	NUT, SHEET SPRING ([illegible]) 17-10015-14	EA		2	•	•	•	•	•	•	•	•	18	6
O 00753	5310-[illegible]-6878	NUT, SHEET SPRING: OUTSIDE CYLINDER PLATE TO BODY ([illegible]) 17-10015-14	EA		2	•	•	•	•	•	•	•	•	16	7
X2H 00754		PANEL ASSEMBLY, HEAD (97403) 13200E9196	EA		1									19	13
X2H 00755		GLASS, HEAD PANEL (97403) 13200E5201	EA		1									19	12
X2H 00756		PANEL: HEAD (97403) 13200E9197	EA		1										
H 00757	5320-117-6982	RIVET, SOLID: HEAD PANEL MTG (96906) MS20470AD6-7	EA		63				•	•	•	•	•	19	8
X2H 00758		STIFFENER: PANEL (97403) 13200E9198	EA		3										
X2H 00759	9320-631-0158	STRIP, WEATHER: GLASS MTG ([illegible]) M2-31	EA		1									19	11
X2F 00760		PANEL ASSEMBLY, FRONT (97403) 13200E5202	EA		1									19	1
X2F 00761		PANEL: ROOF STIFFENER (97403) 13200E5204	EA		1										
X2F 00762		PLATE, ROOF (97403) 13200E5203	EA		1										
X2F 00763		STIFFENER, PANEL (97403) 13200E9198	EA		4										

(1) SMR CODE / INDEX NO.	(2) FEDERAL STOCK NUMBER	(3) DESCRIPTION — REFERENCE NO. & MFR. CODE — USABLE ON CODE	(4) UNIT OF ISSUE	(5) QTY INC IN UNIT PACK	(6) QTY INC IN UNIT	(7) 30-DAY DS MAINT ALLOWANCE (a) 1-20	(b) 21-50	(c) 51-100	(8) 30-DAY GS MAINT ALLOWANCE (a) 1-20	(b) 21-50	(c) 51-100	(9) 1-YR ALW PER 100 EQUIP ENTGCY	(10) DEPOT MAINT ALW-PER 100 EQUIP	(11) ILLUS-TRATION (a) FIG NO.	(b) ITEM NO
X20 00764	1940-994-4211	PANEL ASSEMBLY, HINGED, ROOF (97403) 13200E9205	EA		1									17	1
X2F 00765	2540-888-2851	HINGE: ROOF PANEL (97403) 13200E9073-6	EA		1									17	2
X2F 00766		PANEL: HINGED ROOF, INNER (97403) 13200E9207	EA		1										
X2F 00767		PANEL: HINGED ROOF, OUTER (97403) 13200E9206	EA		1										
X2F 00768		SEAL, WEATHER: ROOF HINGE (08315) A1078	EA		2									17	3
X2F 00769		STIFFENER: REAR ROOF (97403) 13200E9208-1	EA		1										
X2F 00770		STIFFENER: REAR ROOF (97403) 13200E9208-2	EA		1										
X20 00771		PLATE: CYLINDER RETAINER (97403) 13200E9097	EA		1										
X20 00772		RACK ASSEMBLY: OXYGEN CYLINDER (97403) 13200E9242	EA		1									16	3
X20 00773		CHANNEL, BODY ASSEMBLY: FRONT (97403) 13200E9251	EA		1									19	9
X20 00774	5340-093-5560	LOOP, STRAP FASTENER (00000) 8928423	EA		2									16	4
X20 00775		PLATE: OXYGEN CYLINDER RACK (97403) 13200E9242	EA		1										
X20 00776		PLATE: OXYGEN CYLINDER RETAINER (97403) 13200E9027	EA		1									16	9
0 00777	5320-117-6856	RIVET SOLID: STRAP FASTENER LOOP MTG (00000) 588147	EA		4	•	•	•	•	•	•	•	•	16	5
X20 00778		STRAP: OXYGEN TANK MTG (97403) 13200E9245	EA		2									16	14

(1) SMR CODE / INDEX NO.	(2) FEDERAL STOCK NUMBER	(3) DESCRIPTION / REFERENCE NO. & MFR. CODE / USABLE ON CODE	(4) UNIT OF ISSUE	(5) QTY INC IN UNIT PACK	(6) QTY INC IN UNIT	(7) 30-DAY DS MAINT ALLOWANCE (a) 1-20	(b) 21-50	(c) 51-100	(8) 30-DAY GS MAINT ALLOWANCE (a) 1-20	(b) 21-50	(c) 51-100	(9) 1-YR ALW PER 100 EQUIP CNTGCY	(10) DEPOT MAINT ALW PER 100 EQUIP	(11) ILLUSTRATION (a) FIG NO.	(b) ITEM NO
F 00793	5320-117-6790	RIVET, SOLID: CROSSMEMBER TO BODY MTG AND FLOOR TO CROSSMEMBER (96906) MS20470AD8-14	EA		149	•	•	•	•	•	•	•	•	18	2
F 00794	5320-117-6950	RIVET, SOLID: GRIP LEDGE MTG (96906) MS20426AD4-5	EA		29	•	•	•	•	•	•	•	•	15	3
O 00795	5320-117-6582	RIVET, SOLID: FLOOD LIGHT BRACKET MTG (96906) MS20470AD6-7	EA		18	•	•	•	•	•	•	•	•	11	4
O 00796	5320-117-7287	RIVET, SOLID: HINGE TO ACCESS PLATE AND FLOOR (96906) MS20426AD6-7	EA		8	•	•	•	•	•	•	•	•	21	17
02F 00797	5320-117-6950	RIVET, SOLID: SHEET SPRING NUT MTG (96906) MS20426AD4-5	EA		4									18	5
O 00798	5320-117-6937	RIVET, SOLID: SHEET SPRING NUT MTG (96906) MS20426AD3-3	EA		4	•	•	•	•	•	•	•	•		
F 00799	5320-117-7287	RIVET, SOLID: SHELF, SUPPORT, WHEEL HOUSING PANEL MTG (96906) MS20426AD6-7	EA		77	•	•	•	•	•	•	•	•	15	1
F 00800	5320-117-6582	RIVET, SOLID: STOP PLATE TO FLOOR MTG (96906) MS20470AD6-7	EA		18	•	•	•	•	•	•	•	•	18	4
O 00801	5320-242-0314	RIVET, SOLID: TAILGATE HINGE TO BODY (96906) MS20470AD8-18	EA		12	•	•	•	•	•	•	•	•	12	14
O 00802	5305-068-0502	SCREW, CAP, HEXAGON HEAD: CHAIN BRACKET TO BODY (96906) MS90725-6	EA		2	•	•	•	•	•	•	•	•	12	19
O 00803	5305-225-3839	SCREW, CAP, HEXAGON HEAD: CHAIN BRACKET TO BODY (96906) MS90725-8	EA		2	•	•	•	•	•	•	•	•	12	18
O 00804	5305-269-3211	SCREW, CAP, HEXAGON HEAD: RETAINER TO BRACKET (96906) MS90725-60	EA		2	•	•	•	•	•	•	•	•	10	16
O 00805	5305-050-1077	SCREW, CAP, HEXAGON HEAD: VISE TO TAILGATE (96906) MS90725-118	EA		3	•	•	•	•	•	•	•	•	12	6
O 00806	5305-012-0697	SCREW, MACHINE: BRACE ASSEMBLY MTG (96906) MS35241-88	EA		16	•	•	•	•	•	•	•	•	13	9
O 00807	5305-012-0697	SCREW, MACHINE: OXYGEN RACK MTG (96906) MS35241-88	EA		9	•	•	•	•	•	•	•	•	16	13

(1) SMR CODE / INDEX NO.	(2) FEDERAL STOCK NUMBER	(3) DESCRIPTION — REFERENCE NO. & MFR. CODE — USABLE ON CODE	(4) UNIT OF ISSUE	(5) QTY INC IN UNIT PACK	(6) QTY INC IN UNIT	(7) 30-DAY DS MAINT ALLOWANCE (a) 1-20	(b) 21-50	(c) 51-100	(8) 30-DAY GS MAINT ALLOWANCE (a) 1-20	(b) 21-30	(c) 51-100	(9) 1-YR ALW PER 100 EQUIP CNTGCY	(10) DEPOT MAINT ALW-PER 100 EQUIP	(11) ILLUSTRATION (a) FIG NO.	(b) ITEM NO
PAO 00822		BOARD, HARDWOOD: TAILGATE	EA		2									12	3
		MANUFACTURE FROM:													
PAO 00823	5510-255-9495	LUMBER, HARDWOOD (4 FT 2 3/8 IN. LG BY 7 9/16 IN. W, 1 IN. THK REQUIRED FOR EACH BOARD)	FT			SEE DPP 9501									
X20 00824		BRACKET AND CHAIN ASSEMBLY: TAILGATE (97403) 13200E9217	EA		2										
X1 00825		BRACKET (97403) 13200E9221	EA		4									12	31
X1 00826	4010-899-7756	CHAIN (00000) 42C1499S	EA		2									12	16
0 00827	5306-054-8010	BOLT, SQUARE NECK: BOARD TO FRAME (96906) MS35751-19	EA		10	•	•	•	•	•	•	•	•	12	27
0 00828	5306-057-2506	BOLT, SQUARE NECK: CHAIN, BRACKET AND HINGE TO TAILGATE (96906) MS35751-20	EA		6	•	•	•	•	•	•	•	•	12	28
0 00829	5306-057-2507	BOLT, SQUARE NECK: HINGE TO TAILGATE (96906) MS35751-21	EA		6	•	•	•	•	•	•	•	•	12	29
X20 00830		COVER, CHAIN (97403) 13200E9226	EA		2									12	17
X20 00831		FRAME, TAILGATE (97403) 13200E9211	EA		1									12	8
X20 00832		HINGE, TAILGATE (97403) 13200E9214	EA		2									12	13
0 00833	5310-761-6982	NUT, PLAIN, SQUARE: CHAIN BRACKET AND FRAME MTG (96906) MS51967-2	EA		22	•	•	•	•	•	•	•	•	12	11
0 00834	5315-839-5822	PIN, COTTER: HINGE PIN (96906) MS24665-353	EA		2	•	•	•	•	•	•	•	•	12	12
X20 00835		PIN, HINGE: TAILGATE, 1/2 IN. DIA, 5 IN. LG HEADED (97403) 13200E9227	EA		2									12	15

(1) SMR CODE / INDEX NO.	(2) FEDERAL STOCK NUMBER	(3) DESCRIPTION — REFERENCE NO. & MFR. CODE — USABLE ON CODE	(4) UNIT OF ISSUE	(5) QTY INC IN UNIT PACK	(6) QTY INC IN UNIT	(7) 30-DAY DS MAINT ALLOWANCE (a) 1-20	(b) 21-50	(c) 51-100	(8) 30-DAY GS MAINT ALLOWANCE (a) 1-20	(b) 21-50	(c) 51-100	(9) 1-YR ALW PER 100 EQUIP ON TOCY	(10) DEPOT MAINT ALW-PER 100 EQUIP	(11) ILLUSTRATION (a) FIG NO.	(b) ITEM NO
0 00851	5310-584-5272	WASHER, LOCK: VISE TO TAILGATE (96906) MS35338-48	EA		3	•	•	•	•	•	•	•	•	12	2
0 00852	5310-024-2206	WASHER, PANEL FASTENER SCREW: ACCESS DOOR (94222) 17-10014-11	EA		2	•	•	•	•	•	•	•	•	21	16
H 00853	5310-768-0318	NUT, PLAIN, HEXAGON: BODY MTG (96906) MS51967-14	EA		8				•	•	•	•	•	18	11
0 00854	5310-013-4530	NUT, PLAIN, HEXAGON: RETAINER CLIP MTG (96906) MS35649-62	EA		15	•	•	•	•	•	•	•	•	10	31
X20 00855	4940-062-8676	PLATE: DOOR BRACE (97403) 13200E9067-2	EA		8									17	16
0 00856	5320-117-6939	RIVET, SOLID: DOOR BRACE PLATE MTG (96906) MS20426AD3-5	EA		16	•	•	•	•	•	•	•	•	10	25
0 00857	5320-117-6852	RIVET, SOLID: LOOP MTG (96906) MS20470AD6-7	EA		2	•	•	•	•	•	•	•	•	11	23
0 00858	5320-117-7287	RIVET, SOLID: LOOP MTG (96906) MS20426AD6-7	EA		48	•	•	•	•	•	•	•	•	10	38
H 00859	5305-782-9495	SCREW, CAP, HEXAGON HEAD: BODY MTG (96906) MS90725-111	EA		8				•	•	•	•	•	18	7
0 00860	5305-043-6663	SCREW, MACHINE: RETAINER CLIP MTG (96906) MS35225-28	EA		15	•	•	•	•	•	•	•	•	10	5
X20 00861		SHIM: DOOR BRACE (97403) 13200E9067-1	EA		8									10	27
H 00862	5310-809-5998	WASHER, FLAT: BODY MTG (96906) MS27183-18	EA		8				•	•	•	•	•	18	8
H 00863	5310-639-8190	WASHER, LOCK: BODY MTG (96906) MS35298-111	EA		8				•	•	•	•	•	18	10
0 00864	5310-596-7674	WASHER, LOCK: RETAINER CLIP MTG (96906) MS35338-22	EA		15	•	•	•	•	•	•	•	•	10	36
0 00865	5310-024-2206	WASHER, PANEL FASTENER SCREW: OXYGEN CYLINDER ACCESS PLATE (94222) 17-10014-11	EA		2	•	•	•	•	•	•	•	•	16	8

(1) SMR CODE / INDEX NO.	(2) FEDERAL STOCK NUMBER	(3) DESCRIPTION / REFERENCE NO. & MFR. CODE / USABLE ON CODE	(4) UNIT OF ISSUE	(5) QTY INC IN UNIT PACK	(6) QTY INC IN UNIT	(7) 30-DAY DS MAINT ALLOWANCE (a) 1-20	(b) 21-50	(c) 51-100	(8) 30-DAY GS MAINT ALLOWANCE (a) 1-20	(b) 21-50	(c) 51-100	(9) 1-YR ALW PER 100 EQUIP CNTGCY	(10) DEPOT MAINT ALW-PER 100 EQUIP	(11) ILLUSTRATION (a) FIG NO.	(b) ITEM NO.
F 00881	5315-781-2005	KEY, MACHINE: OPERATING ARM TO SHAFT, 1/4 x 1/4 x 1 1/8 IN. LG (96906) MS20068-146	EA		1	•	•	•	•	•	•	•	•	24	9
XZF 00882	5315-873-1660	KEY, MACHINE: THROWOUT YOKE TO SHAFT (96906) MS20068-144	EA		2									24	10
F 00883	5315-298-1499	PIN, COTTER: SHAFT TO BRACKET MTG, 1/8 x 1 1/2 IN. LG (96906) MS24665-360	EA		2	•	•	•	•	•	•	•	•	24	5
F 00884	5305-269-3214	SCREW, CAP, HEXAGON HEAD: THROWOUT YOKE MTG (96906) MS90725-64	EA		2	•	•	•	•	•	•	•	•	24	11
F 00885	5305-249-0511	SETSCREW: OPERATING ARM TO SHAFT MTG, 1/4-20 THD SIZE, 1/4 IN. LG (96906) MS51017-63	EA		1	•	•	•	•	•	•	•	•	24	8
XZF 00886		SHAFT, TAKE-OFF ARM (97403) 13200E0973	EA		1									24	6
F 00887	5310-013-8542	WASHER, LOCK: THROWOUT YOKE MTG (96906) MS35333-25	EA		2	•	•	•	•	•	•	•	•	24	12
XZF 00888	2520-589-0574	YOKE, CLUTCH THROW (61208) 125A	EA		1									24	14
X20 00889		GUARD ASSEMBLY: POWER DIVIDER (97403) 13200E0967	EA		1										
X20 00890		DOOR, ACCESS: GUARD (97403) 13200E0969	EA		1									23	8
X1 00891		GUARD (97403) 13200E0968	EA		1									23	7
X20 00892		HINGE, DOOR (97403) 13200E0970	EA		1									23	6
O 00893	5310-888-2678	NUT, SHEET SPRING: SCREW FASTENER (94222) 17-10015-18	EA		1	•	•	•	•	•	•	•	•	23	2
X20 00894		PLATE: DOOR STOP (97403) 13200E0971	EA		1									23	3
O 00895	5320-117-6951	RIVET, SOLID: SHEET SPRING NUT MTG AND REINFORCING STRIP AND HINGE MTG, 1/8 IN. DIA, 7/16 IN. LG (96906) MS20426AD4-8	EA		19	•	•	•	•	•	•	•	•	23	4

(1) SMR CODE / INDEX NO.	(2) FEDERAL STOCK NUMBER	(3) DESCRIPTION — REFERENCE NO. & MFR. CODE	USABLE ON CODE	(4) UNIT OF ISSUE	(5) QTY INC IN UNIT PACK	(6) QTY INC IN UNIT	(7) 30-DAY DS MAINT ALLOWANCE (a) 1-20	(b) 21-50	(c) 51-100	(8) 30-DAY GS MAINT ALLOWANCE (a) 1-20	(b) 21-50	(c) 51-100	(9) 1-YR ALW PER 100 EQUIP CNTGCY	(10) DEPOT MAINT ALW-PER 100 EQUIP	(11) ILLUSTRATION (a) FIG NO.	(b) ITEM NO.
X2F 00911		SPRING, TENSION: LEVER LOCKING (97403) 13200E0926	A	EA		1										
X2F 00912		STUD, LEVER (97403) 13200E0925	A	EA		1									31	11
F 00913	5310-809-8536	WASHER, FLAT: LEVER SHAFT (96906) MS27183-24	A	EA		2	•	•	•	•	•	•	•	•	31	8
X20 00914		LINKAGE ASSEMBLY: UPPER POWER DIVIDER (16004) 33965	B	EA		1										
X20 00915		BELLCRANK (97403) 13200E0951	B	EA		1									43	17
X20 00916		BUSHING: PANEL (16004) 33963	B	EA		1									43	2
X20 00917	5340-985-0823	CLEVIS, ROD END (96906) MS35812-4	B	EA		1									43	6
X20 00918		KNOB: SHAFT LEVER (97403) 13200E9711	B	EA		1									43	1
O 00919	5310-732-0559	NUT, PLAIN, HEXAGON: CLEVIS LOCKING (96906) MS51968-8	B	EA		1	•	•	•	•	•	•	•	•	43	4
O 00920	5310-877-5795	NUT, SELF-LOCKING, HEXAGON: BELLCRANK TO SUPPORT (96906) MS21044N8	B	EA		1	•	•	•	•	•	•	•	•	43	20
O 00921	5315-839-5822	PIN, COTTER: CLEVIS PIN, 1/8 IN. x 1 IN. LG	B	EA		2	•	•	•	•	•	•	•	•	43	5
O 00922	5315-815-8840	PIN, STRAIGHT, HEADED: CLEVIS (96906) MS35810-34	B	EA		2	•	•	•	•	•	•	•	•	43	7
X20 00923		PLATE, NAME: GENERATOR CLUTCH SHIFT LINKAGE (16004) 33962	B	EA		1	SEE GMP 2210									
X20 00924		ROD: KNOB TO CLEVIS (97403) 13200E0950	B	EA		2									43	3
O 00925	5305-269-3215	SCREW, CAP, HEXAGON HEAD: SUPPORT MTG (96906) MS90725-65	B	EA		1	•	•	•	•	•	•	•	•	43	22

(1) SMR CODE / INDEX NO.	(2) FEDERAL STOCK NUMBER	(3) DESCRIPTION REFERENCE NO. & MFR. CODE — USABLE ON CODE	(4) ISSUE UNIT	(5) QTY INC IN UNIT PACK	(6) QTY INC IN UNIT	(7) 30-DAY DS MAINT ALLOWANCE (a) 1-30	(b) 21-50	(c) 51-100	(8) 30-DAY GS MAINT ALLOWANCE (a) 1-20	(b) 21-50	(c) 51-100	(9) 1-YR ALW PER NHA EQUIP ENTOCY	(10) DEPOT MAINT ALW-PER 100 EQUIP	(11) ILLUSTRATION (a) FIG NO.	(b) ITEM NO.
X20 00779	4940-804-1349	RECEPTACLE, BODY OUTLET: TRUCK BODY (77582) 5804	EA		2										
X20 00780		PLATE AND CAP (77582) 2701	EA		2										
X20 00781		RECEPTACLE (77582) 5015	EA		2										
X20 00782		RETAINER: ACETYLENE CYLINDER (97673) 13200E9112	EA		1									10	14
0 00783	5320-117-6892	RIVET, BLIND: DOOR HINGE MTG (96906) MS20470AD6-7	EA		66	•	•	•	•	•	•	•	•	17	7
0 00784	5320-582-3268	RIVET, BLIND: DOOR LOCK MTG (96906) MS20600AD6-3	EA		10	•	•	•	•	•	•	•	•	17	12
0 00785	5320-646-7806	RIVET, BLIND: PLATE, CATCH, REAR DOOR STOP AND HOOK CLAMP MTG (98222) 38-206-06-13	EA		32	•	•	•	•	•	•	•	•	11	2
0 00786	5320-582-3268	RIVET, BLIND: SUPPORT TO BODY (96906) MS20600AD6-3	EA		22	•	•	•	•	•	•	•	•	10	39
0 00787	5320-117-6582	RIVET, SOLID: ACETYLENE CYLINDER BRACKET, WELDING HOSE BRACKET RETAINER GUIDER MTG (96906) MS20470AD6-7	EA		98	•	•	•	•	•	•	•	•	10	1
F 00788	5320-117-6582	RIVET, SOLID: BRACE FRONT BODY PANEL MTG (96906) MS20470AD6-7	EA		36	•	•	•	•	•	•	•	•	19	2
0 00789	5320-117-6582	RIVET, SOLID: CATCH MTG (96906) MS20470AD6-7	EA		4	•	•	•	•	•	•	•	•	16	6
F 00790	5320-117-6582	RIVET, SOLID: CHANNEL MTG (96906) MS20470AD6-7	EA		6	•	•	•	•	•	•	•	•	14	2
F 00791	5320-117-6582	RIVET, SOLID: CHANNEL TO BODY MTG (96906) MS20470AD6-7	EA		27	•	•	•	•	•	•	•	•	19	8
F 00792	5320-117-6790	RIVET, SOLID: CHANNEL TO BODY MTG (96906) MS20470AD6-14	EA		27	•	•	•	•	•	•	•	•	19	10

(1) SMR CODE / INDEX NO.	(2) FEDERAL STOCK NUMBER	(3) DESCRIPTION REFERENCE NO. & MFR. CODE — USABLE ON CODE	(4) UNIT OF ISSUE	(5) QTY INC IN UNIT PACK	(6) QTY INC IN UNIT	(7) 30-DAY DS MAINT ALLOWANCE (a) 1-20	(b) 21-50	(c) 51-100	(8) 30-DAY GS MAINT ALLOWANCE (a) 1-20	(b) 21-50	(c) 51-100	(9) 1-YR ALW PER 100 EQUIP CNTGCY	(10) DEPOT MAINT ALW-PER 100 EQUIP	(11) ILLUSTRATION (a) FIG NO.	(b) ITEM NO.
F 00808	5305-984-6208	SCREW, MACHINE: RECEPTACLE BOX MTG (96906) MS35206-261	EA		4	•	•	•	•	•	•	•	•	22	12
F 00809	5305-068-0502	SCREW, MACHINE: STRAP MTG (96906) MS90725-6	EA		5	•	•	•	•	•	•	•	•	22	4
O 00810	5305-012-0697	SCREW, MACHINE: TAILGATE LATCH TO BODY (96906) MS35241-28	EA		4	•	•	•	•	•	•	•	•	12	24
O 00811	5305-888-2879	SCREW, PANEL FASTENER: ACCESS PLATE TO FLOOR (94222) 17-11-206-12	EA		2	•	•	•	•	•	•	•	•	21	14
O 00812	5305-888-2879	SCREW, PANEL FASTENER: OXYGEN CYLINDER ACCESS PLATE (94222) 17-11-206-12	EA		2	•	•	•	•	•	•	•	•	16	10
O 00813	5305-057-9612	SCREW, TAPPING, THREAD FORMING: CLIP MTG (96906) MS24621-30	EA		8	•	•	•	•	•	•	•	•	13	1
O 00814	5305-052-6920	SCREW, TAPPING, THREAD FORMING: FRONT DOORS, RIGHT AND LEFT SIDE WEATHER STRIP AND MOLDING MTG (96906) MS24629-56	EA		94	•	•	•	•	•	•	•	•	13	6
O 00815	5305-052-6921	SCREW, TAPPING, THREAD FORMING: INSPECTION PLATE TO FLOOR (96906) MS24629-57	EA		6	•	•	•	•	•	•	•	•	21	21
O 00816	5305-895-0065	SCREW, TAPPING, THREAD FORMING: LATCH ROD GUIDE MTG (96906) MS24629-38	EA		8	•	•	•	•	•	•	•	•	17	17
X20 00817		STOP: OXYGEN CYLINDER RETAINER (97403) 13200E9091	EA		1									16	11
X20 00818		STOP: REAR DOOR (97403) 13200E9254	EA		2									11	3
X2F 00819	5340-247-4852	STRAP, RETAINING: FOR 1/2 IN. CONDUIT (96906) MS35140-10	EA		2									22	5
X20 00820		STRAP, WEBBING: W/BUCKLE AND END CLIP, 1 1/2 IN. W, 3 FT, 4 IN. LG (00000) 592662	EA		2										
X20 00821		TAILGATE ASSEMBLY (97403) 13200E9210	EA		1										

(1) SMR CODE / INDEX NO.	(2) FEDERAL STOCK NUMBER	(3) DESCRIPTION / REFERENCE NO. & MFR. CODE / USABLE ON CODE	(4) UNIT OF ISSUE	(5) QTY INC IN UNIT PACK	(6) QTY INC IN UNIT	(7) 30-DAY DS MAINT ALLOWANCE (a) 1-20	(b) 21-50	(c) 51-100	(8) 30-DAY GS MAINT ALLOWANCE (a) 1-20	(b) 21-50	(c) 51-100	(9) 1-YR ALW PER 100 EQUIP IN TOCY	(10) DEPOT MAINT ALW-PER 100 EQUIP	(11) ILLUSTRATION (a) FIG NO.	(b) ITEM NO
0 00836	5305-016-4359	SCREW, TAPPING, THREAD FORMING: STRIP TO FRAME (00000) 164359	EA		9	•	•	•	•	•	•	•	•	12	30
M 0 00837		SKIN, TAILGATE	EA		1									12	4
		MANUFACTURE FROM:													
P 0 00838	9535-233-1860	ALUMINUM ALLOY SHEET (15 1/2 IN. W, 4 FT, 4 1/2 IN. LG REQUIRED)	SH			SEE BRP 9501									
X20 00839		STRAP, TAILGATE (97403) 13200E9225	EA		2									12	9
X20 00840		STRIP, TOP: TAILGATE (97403) 13200E9253	EA		1									12	7
0 00841		WASHER, FLAT: OXYGEN RACK MTG (96906) MS27183-10	EA		9	•	•	•	•	•	•	•	•	16	12
0 00842	5310-809-5998	WASHER, FLAT: VISE MTG (96906) MS27183-18	EA		3	•	•	•	•	•	•	•	•	12	5
0 00843	5310-582-5965	WASHER, LOCK: BRACE ASSEMBLY MTG (96906) MS35338-44	EA		16	•	•	•	•	•	•	•	•	13	18
0 00844	5310-543-2705	WASHER, LOCK: BLOCK MTG (96906) MS35338-25	EA		4	•	•	•	•	•	•	•	•	21	4
0 00845	5310-543-2705	WASHER, LOCK: CHAIN BRACKET TO BODY (96906) MS35338-25	EA		4	•	•	•	•	•	•	•	•	12	10
0 00846	5310-582-5965	WASHER, LOCK: OXYGEN RACK MTG (96906) MS35338-44	EA		9	•	•	•	•	•	•	•	•	16	2
F 00847	5310-043-2226	WASHER, LOCK: RECEPTACLE BOX MTG (96906) MS35338-24	EA		4	•	•	•	•	•	•	•	•	22	9
0 00848	5310-637-9541	WASHER, LOCK: RETAINER TO BRACKET (96906) MS35338-46	EA		2	•	•	•	•	•	•	•	•	10	18
F 00849	5310-543-2705	WASHER, LOCK: STRAP MTG (96906) MS35338-25	EA		5	•	•	•	•	•	•	•	•	22	3
0 00850	5310-543-2705	WASHER, LOCK: TAILGATE STRAP, BRACKET AND FRAME (96906) MS35338-25	EA		22	•	•	•	•	•	•	•	•	12	10

(1) SMR CODE / INDEX NO.	(2) FEDERAL STOCK NUMBER	(3) DESCRIPTION / REFERENCE NO. & MFR. CODE / USABLE ON CODE	(4) UNIT OF ISSUE	(5) QTY INC IN UNIT PACK	(6) QTY INC IN UNIT	(7) 30-DAY DS MAINT ALLOWANCE (a) 1-20	(b) 21-50	(c) 51-100	(8) 30-DAY GS MAINT ALLOWANCE (a) 1-20	(b) 21-50	(c) 51-100	(9) 1-YR ALW PER 100 EQUIP CNTGCY	(10) DEPOT MAINT ALW-PER 100 EQUIP	(11) ILLUSTRATION (a) FIG NO.	(b) ITEM NO.
X2F 00866		WIRING, HARNESS: CONTROL PANEL TO POWER RECEPTACLE (16004) 33651	EA		1									22	2
X2F 00867		WIRING, HARNESS: CONTROL PANEL TO POWER RECEPTACLE (16004) 33652	EA		1									22	11
00868		GROUP 20 - POWER TAKE-OFF													
00869		200A - POWER TAKE-OFF ASSEMBLY													
X2H 00870		BOX ASSEMBLY: POWER TAKE-OFF SUPPORT (97403) 13200E9178	EA		1										
X2H 00871		MEMBER: BOX ASSEMBLY, FRONT (97403) 13200E9180	EA		1									18	19
X2H 00872		MEMBER: BOX ASSEMBLY, REAR (97403) 13200E9182	EA		1									18	17
X2H 00873		RAIL: BOX ASSEMBLY, LEFT (97403) 13200E9179	EA		1									18	18
X2H 00874		RAIL: BOX ASSEMBLY, RIGHT (97403) 13200E9181	EA		1									18	16
H 00875	5320-117-6790	RIVET, SOLID: BOX ASSEMBLY MTG (80044) MS20470AD6-14	EA		12				•	•	•	•	•	18	15
X2F 00876		BRACKET ASSEMBLY: LINKAG (97403) 13200E0927	EA		1										
X2F 00877		ARM, OPERATING (97403) 13200E949	EA		1									24	7
X2F 00878		BRACKET, LINKAGE (97403) 13200E0928	EA		1									24	2
X2F 00879		BUSHING, BRACKET TO SHAFT: LOWER (97403) 13200E0930	EA		1									24	13
X2F 00880		BUSHING, BRACKET TO SHAFT: UPPER (97403) 13200E0929	EA		1									24	15

(1) SMR CODE / INDEX NO.	(2) FEDERAL STOCK NUMBER	(3) DESCRIPTION REFERENCE NO. & MFR. CODE — USABLE ON CODE	(4) UNIT OF ISSUE	(5) QTY INC. IN UNIT PACK	(6) QTY INC. IN UNIT	(7) 30-DAY DS MAINT ALLOWANCE (a) 1-20	(b) 21-50	(c) 51-100	(8) 30-DAY GS MAINT ALLOWANCE (a) 1-20	(b) 21-50	(c) 51-100	(9) 1-YR ALW PER 100 EQUIP CNTGCY	(10) DEPOT MAINT ALW-PER 100 EQUIP	(11) ILLUSTRATION (a) FIG NO.	(b) ITEM NO
0 00896	5305-441-0236	SCREW, PANEL FASTENER: ACCESS DOOR (94222) 17-11-206-11	EA		1	•	•	•	•	•	•	•	•	23	10
M 0 00897		STRIP, REINFORCING	EA		2									23	5
		MANUFACTURE FROM:													
P 0 00898	9515-267-1119	ALUMINUM STRIP, COLD ROLLED (30 IN. REQUIRED FOR EACH STRIP)	FT			SEE GMP 9501									
0 00899	5310-024-2206	WASHER, PANEL FASTENER SCREW (94222) 17-10014-11	EA		1	•	•	•	•	•	•	•	•	23	9
020 00900		LINKAGE ASSEMBLY: UPPER, POWER DIVIDER (97403) 13200E0921 A	EA		1									23	1
02F 00901	3120-661-6951	BEARING, SLEEVE: LEVER SHAFT (89536) F911-3 A	EA		1									31	7
01 00902		BRACKET: LINKAGE (97403) 13200E0924 A	EA		1									31	6
02F 00903	5355-667-6053	KNOB: LEVER A	EA		1									31	12
02F 00904		LEVER, OPERATING (97403) 13200E0922 A	EA		1									31	10
02F 00905		LINK, OPERATING (97403) 13200E0923 A	EA		1									31	5
02F 00906		PLATE, BEARING: LINKAGE TO PANEL (97403) 13200E9174 A	EA		1										
F 00907	5320-058-8862	RIVET, SOLID: BEARING PLATE MTG (96906) MS20470AD6-10 A	EA		4	•	•	•	•	•	•	•	•		
F 00908	5320-855-1316	RIVET, TUBULAR: SPRING MTG (96906) MS16535-158 A	EA		2	•	•	•	•	•	•	•	•		
M F 00909		SHAFT, LEVER (99255) 00921-1 A MANUFACTURE FROM:	EA		1									31	9
P F 00910	9530-278-0702	ALUMINUM ALLOY ROD (1¼ 5/8 IN. REQUIRED) A	FT			SEE GMP 9501									

(1) SMR CODE / INDEX NO.	(2) FEDERAL STOCK NUMBER	(3) DESCRIPTION / REFERENCE NO. & MFR CODE / USABLE ON CODE	(4) UNIT OF ISSUE	(5) QTY INC. IN UNIT PACK	(6) QTY INC. IN UNIT	(7) 30-DAY DS MAINT ALLOWANCE (a) 1-20	(b) 21-50	(c) 51-100	(8) 30-DAY GS MAINT ALLOWANCE (a) 1-20	(b) 21-50	(c) 51-100	(9) 1-YR ALW PER 100 EQUIP QNTY	(10) DEPOT MAINT ALW PER 100 EQUIP	(11) ILLUSTRATION (a) FIG NO.	(b) ITEM NO.
0 00926	5305-879-3825	SCREW, TAPPING, THREAD FORMING: GENERATOR CLUTCH LINKAGE NAMEPLATE MTG (96906) MS24637-1 B	EA		2	SEE GMP 2210									
X20 00927		SUPPORT: BELLCRANK (16004) 33960 B	EA		1									43	16
0 00928	5310-809-5997	WASHER, FLAT: BELLCRANK TO SUPPORT (96906) MS27183-17 B	EA		1	•	•	•	•	•	•	•	•	43	21
0 00929	5310-080-6004	WASHER, FLAT: SUPPORT MTG (96906) MS27183-14 B	EA		2	•	•	•	•	•	•	•	•	43	14
0 00930	5310-637-9541	WASHER, LOCK: SUPPORT MTG (96906) MS35338-46 B	EA		1	•	•	•	•	•	•	•	•	43	15
X2F 00931		POWER TAKE-OFF ASSEMBLY (97403) 13200E9031	EA		1										
P F 00932	4940-089-9053	BAFFLE, BEARING (16004) 30519 B	EA		1	•	•	2	•	•	2	6	5		
P F 00933	3110-107-7558	BEARING, BALL, ANNULAR (43334) 9507	EA		2	•	•	2	•	•	2	8	20	30	25
P F 00934	3110-198-1767	BEARING, BALL, ANNULAR (38443) 307522 B	EA		2	•	•	2	•	•	2	8	20	30	25
P F 00935	3130-108-0684	BEARING UNIT, BALL, PILLOW BLOCK (57448) MP22	EA		2	•	•	2	•	•	2	8	20	30	9
F 00936	5306-225-8502	BOLT, MACHINE: DRIVING RING TO PULLEY (96906) MS90725-38	EA		6	•	•	•	•	•	•	•	•	30	21
F 00937	5306-225-8494	BOLT, MACHINE: SHAFT (96906) MS90725-29 B	EA		1	•	•	•	•	•	•	•	•		
X2F 00938		CLUTCH ASSEMBLY (61208) 19672	EA		1										
P F 00939	2520-757-1879	CONE ASSEMBLY, CLUTCH (61208) C535	EA		1	•	•	2	•	•	2	6	5	30	3
P F 00940	3110-195-6789	BEARING, BALL, ANNULAR (61208) M219	EA		1	•	•	•	•	•	•	4	10	30	6

(1) SMR CODE — INDEX NO.	(2) FEDERAL STOCK NUMBER	(3) DESCRIPTION — REFERENCE NO. & MFR. CODE — USABLE ON CODE	(4) UNIT OF ISSUE	(5) QTY INC IN UNIT PACK	(6) QTY INC IN UNIT	(7) 30-DAY DS MAINT ALLOWANCE (a) 1-20	(b) 21-50	(c) 51-100	(8) 30-DAY GS MAINT ALLOWANCE (a) 1-20	(b) 21-50	(c) 51-100	(9) 1-YR ALW PER 100 EQUIP ON TOCY	(10) DEPOT MAINT ALW-PER 100 EQUIP	(11) ILLUSTRATION (a) FIG NO.	(b) ITEM NO
X1 00941	2520-496-2109	COLLAR, CLUTCH THROWOUT (61208) 4439	EA		1									30	8
X2F 00942		NUT, PLAIN, HEXAGON: COLLAR ASSEMBLY (61208) MS9307	EA		2										
X2F 00943	3895-496-2017	RING, CLUTCH CONE (61208) A2329	EA		1									30	2
X2F 00944	5340-496-2022	RING, RETAINING (61208) A2669G A	EA		1									30	4
X2F 00945		RING, SNAP (61208) A1004	EA		1									30	7
F 00946	5305-044-1395	SCREW, CAP, HEXAGON HEAD: COLLAR ASSEMBLY (96906) MS51106-65	EA		2	•	•	•	•	•	•	•	•		
X2F 00947	2805-447-8959	SHIM: COLLAR ASSEMBLY (61208) 12008	EA		2										
X2F 00948	2520-821-9464	SLEEVE, CONE (61208) A2340J	EA		1										
F 00949	5310-062-2668	WASHER, FLAT: BEARING RETAINER (61208) 2945	EA		1	•	•	•	•	•	•	•	•	30	5
X2F 00950	3010-368-6470	COVER, VIBRATOR, CLUTCH (61208) A3760	EA		1									30	1
P F 00951	3010-362-2950	DISC, CLUTCH (61208) A35075	EA		3	•	2	2	•	2	2	18	15	30	31
X2F 00952	3895-368-6471	DISC, CLUTCH: ROLLER (61208) A2492	EA		1									30	33
O 00953	4730-050-4207	FITTING, LUBRICATION: PILLOW BLOCK AND COLLAR (96906) MS15001-4	EA		4	•	•	•	•	•	•	•	•	30	10
O 00954	5315-423-8038	PIN, DRIVE: NAMEPLATE MTG (61208) 1333	EA		2	SEE GRP 2210									
F 00955	2520-325-7389	PIN, SPRING: SPRING ALIGNING (61208) MS9276	EA		4	•	•	•	•	•	•	•	•	30	37

(1) SMR CODE / INDEX NO.	(2) FEDERAL STOCK NUMBER	(3) DESCRIPTION — REFERENCE NO. & MFR. CODE — USABLE ON CODE	(4) UNIT OF ISSUE	(5) QTY INC IN UNIT PACK	(6) QTY INC IN UNIT	(7) 30-DAY DS MAINT ALLOWANCE (a) 1-20	(b) 21-50	(c) 51-100	(8) 30-DAY GS MAINT ALLOWANCE (a) 1-20	(b) 21-50	(c) 51-100	(9) 1-YR ALW PER 100 EQUIP CNTGCY	(10) DEPOT MAINT ALW-PER 100 EQUIP	(11) ILLUSTRATION (a) FIG NO.	(b) ITEM NO
XZF 00971	3895-378-1006	ROLLER, CLUTCH LEVER (61208) A2331	EA		6									30	15
XZF 00972	3010-597-3040	SPRING, HELICAL, COMPRESSION: PIN LOCKING (61208) 2424	EA		1									30	35
XZF 00973	2520-292-4432	SPRING, HELICAL, TORSION: LEVER (61208) A2618	EA		3									30	14
XZF 00974	3010-352-6219	YOKE, ADJUSTING (61208) A3759	EA		1									30	12
XZO 00975	4730-050-4208	FITTING, LUBRICATION: CLUTCH COLLAR B (96906) MS15003-1	EA		2									30	10
XZO 00976	4730-050-4205	FITTING, LUBRICATION: PILLOW BLOCK, 1/8-28 THD SIZE, 45 DEGREE B (96906) MS15001-3	EA		1									30	10
P F 00977	2805-378-1029	GEAR, INTERNAL (61208) 6939	EA		1	•	•	•	•	•	•	4	5	30	23
XZF 00978		HOUSING B (57480) P106	EA		2										
XZF 00979		KEY: SHAFT (16884) 30893	EA		1									30	18
F 00980	5315-050-5759	KEY, MACHINE: SHAFT TO CONE SLEEVE A (97897) 505759	EA		1	•	•	•	•	•	•	•	•	30	18
F 00981	5315-781-8017	KEY, MACHINE: SHAFT TO HUB, 5/16 x 5/16 x 2 IN. LG (96906) MS20068-200	EA		1	•	•	•	•	•	•	•	•	30	19
F 00982	5315-042-3863	KEY, MACHINE: SHAFT TO YOKE A (96906) MS20067-171	EA		1	•	•	•	•	•	•	•	•	30	20
XZF 00983	4940-896-8972	NUT, POWER TAKE-OFF B (16004) 9375	EA		1									30	28
F 00984	5315-298-1481	PIN, COTTER: SHAFT B (96906) MS24665-357	EA		1	•	•	•	•	•	•	•	•		
P F 00985	5340-598-6232	RING, RETAINING: BEARING B (96906) MS16625-1315	EA		1	•	•	•	•	•	•	•	•	30	4

(1) SMR CODE — INDEX NO.	(2) FEDERAL STOCK NUMBER	(3) DESCRIPTION — REFERENCE NO. & Mfr. CODE — USABLE ON CODE	(4) UNIT OF ISSUE	(5) QTY INC IN UNIT PACK	(6) QTY INC IN UNIT	(7) 30-DAY DS MAINT ALLOWANCE (a) 1-20	(b) 21-50	(c) 51-100	(8) 30-DAY GS MAINT ALLOWANCE (a) 1-20	(b) 21-50	(c) 51-100	(9) 1-YR ALW PER 100 EQUIP CNTGCY	(10) DEPOT MAINT ALW-PER 100 EQUIP	(11) ILLUSTRATION (a) FIG NO.	(b) ITEM NO
XZF D1001	3990-896-7241	PULLEY, POWER TAKE-OFF (97403) 13200E9031-8	A	EA		1								30	24
F D1002	5305-226-7768	SCREW, CAP, HEXAGON HEAD; BEARING PLATE MTG (96906) MS90726-115	A	EA		2	•	•	•	•	•	•	•	24	4
O D1003	5305-267-8979	SCREW, CAP, HEXAGON HEAD; UPPER LINKAGE ASSEMBLY MTG (96906) MS90726-13	A	EA		2	•	•	•	•	•	•	•	23	14
O D1004	5305-014-5207	SCREW, TAPPING, THREAD FORMING; GUARD MTG (00000) 142507		EA		7	•	•	•	•	•	•	•	23	11
F D1005	5310-823-8803	WASHER, FLAT; HUB YOKE TO SHAFT (96906) MS27183-21	A	EA		1	•	•	•	•	•	•	•	30	27
O D1006		WASHER, FLAT; UPPER LINKAGE ASSEMBLY MTG (96906) MS27183-10	A	EA		2	•	•	•	•	•	•	•	23	13
F D1007	5310-012-0239	WASHER, LOCK; BEARING PLATE MTG (00000) 852850	A	EA		2	•	•	•	•	•	•	•	24	3

(1) SMR CODE / INDEX NO.	(2) FEDERAL STOCK NUMBER	(3) DESCRIPTION — REFERENCE NO. & MFR. CODE — USABLE ON CODE	(4) UNIT OF ISSUE	(5) QTY INC IN UNIT PACK	(6) QTY INC IN UNIT	(7) 30-DAY DS MAINT ALLOWANCE (a) 1-20	(b) 21-50	(c) 51-100	(8) 30-DAY GS MAINT ALLOWANCE (a) 1-20	(b) 21-50	(c) 51-100	(9) 1-YR ALW PER 100 EQUIP CNTGCY	(10) DEPOT MAINT ALW-PER 100 EQUIP	(11) ILLUSTRATION (a) FIG NO	(b) ITEM NO
X20 01023	3810-317-6754	PLATE, INSTRUCTION: GOVERNOR OIL LEVER (77260) X1945	EA		1										
X20 01024		PLATE, INSTRUCTION: POINTER TO GENERATOR ENGAGING AND DISENGAGING A (97403) 13200E0947	EA		1										
X20 01025	6115-025-3099	PLATE, INSTRUCTION: RHEOSTAT (28835) A891	EA		1										
X20 01026	3431-025-3097	PLATE, INSTRUCTION: RHEOSTAT B (28835) AM579	EA		1										
X20 01027		PLATE, INSTRUCTION: THROTTLE B (97403) 13200E0963	EA		1										
X20 01028		PLATE, INSTRUCTION: THROTTLE B (16004) 31519	EA		1										
X20 01029		PLATE, NAME: GENERATOR CLUTCH SHIFT LINKAGE B (16004) 33962	EA		1										
X20 01030	2990-246-9335	PLATE, NAME: GOVERNOR BODY (77260) X581	EA		1										
X20 01031		PLATE, NAME: OVERSPEED B (28835) BM1571	EA		1										
X20 01032		PLATE, NAME: TWIN DISK A (61208) A2018	EA		1										
X20 01033		PLATE, SWITCH B (92866) BC158A	EA		1										
0 01034		RIVET, BLIND: GENERATOR POINTER INSTRUCTION PLATE MTG, .203 DIA X .295 LG (98255) POS	EA		10	•	•	•	•	•	•	•	•		
0 01035	5305-067-9896	SCREW: OVERSPEED NAMEPLATE, SELF-TAPPING B (96906) MS24621-55	EA		2	•	•	•	•	•	•	•	•		
0 01036	5305-840-5938	SCREW, DRIVE: RHEOSTAT NAMEPLATE AND INSTRUCTION PLATE MTG (96906) MS21318-19	EA		9	•	•	•	•	•	•	•	•		

(1) SMR CODE / INDEX NO.	(2) FEDERAL STOCK NUMBER	(3) DESCRIPTION — REFERENCE NO. & MFR. CODE — USABLE ON CODE	(4) UNIT OF ISSUE	(5) QTY INC IN UNIT PACK	(6) QTY INC IN UNIT	(7) 30-DAY DS MAINT ALLOWANCE (a) 1-20	(b) 21-50	(c) 51-100	(8) 30-DAY GS MAINT ALLOWANCE (a) 1-20	(b) 21-50	(c) 51-100	(9) 1-YR ALW PER 100 EQUIP CNTGCY	(10) DEPOT MAINT ALW-PER 100 EQUIP	(11) ILLUSTRATION (a) FIG NO	(b) ITEM NO
0 01051	5305-988-1721	SCREW, MACHINE: CLIP TO TERMINAL (96906) MS35206-277	EA		2	•	•	•	•	•	•	•	•	21	13
0 01052	5940-812-5186	TERMINAL, LUG: STYLE 11, NO. 2 TO 1 AWG	EA		2	•	•	•	•	•	•	•	•	21	10
0 01053	5310-582-5965	WASHER, LOCK: CLIP TO TERMINAL (96906) MS35338-44	EA		2	•	•	•	•	•	•	•	•	21	12
0 01054	5310-877-5797	NUT, SELF-LOCKING HEXAGON: SLAVE RECEPTACLE MTG (96906) MS21044-N3	EA		4	•	•	•	•	•	•	•	•	21	24
P 0 01055	4940-795-7625	RECEPTACLE AND CABLE, BATTERY CHARGING: SLAVE (28035) 8BM1291	EA		1	•	•	2	•	•	2	6	5	21	1
P 0 01056	5935-295-6403	CONNECTOR, RECEPTACLE, ELECTRICAL (00000) 7321299	EA		1	•	•	2	•	•	2	6	5	21	25
0 01057	5305-989-7435	SCREW, MACHINE: SLAVE RECEPTACLE MTG (96906) MS35207-264	EA		4	•	•	•	•	•	•	•	•	21	22
0 01058	5310-043-2226	WASHER, LOCK: SLAVE RECEPTACLE MTG (96906) MS35338-24	EA		4	•	•	•	•	•	•	•	•	21	23
01059		GROUP 44 - WELDING EQUIPMENT													
01060		4400 - ARC WELDER													
X2F 01061		BAR: GENERATOR ADJUSTING (97403) 13200E0943	EA		2									32	13
X2F 01062		BAR: GENERATOR TIE (97403) 13200E0944	EA		2									32	16
X2F 01063		BASE ASSEMBLY: GENERATOR (97403) 13200E0941	EA		1									32	17
X20 01064		BOLT, EYE: GENERATOR LIFTING (28035) 6FV3060 B	EA		1									44	31
X20 01065		BOLT, EYE: MAIN GENERATOR (28035) A3434 A	EA		1									34	10

(1) SMR CODE / INDEX NO.	(2) FEDERAL STOCK NUMBER	(3) DESCRIPTION REFERENCE NO & MFR. CODE — USABLE ON CODE	(4) UNIT OF ISSUE	(5) QTY INC IN UNIT PACK	(6) QTY INC IN UNIT	(7) 30-DAY DS MAINT ALLOWANCE (a) 1-20	(b) 21-50	(c) 51-100	(8) 30-DAY GS MAINT ALLOWANCE (a) 1-20	(b) 21-50	(c) 51-100	(9) 1-YR ALW PER 100 EQUIP ENTOCY	(10) DEPOT MAINT ALW-PER 100 EQUIP	(11) ILLUSTRATION (a) FIG NO.	(b) ITEM NO
F 01081	5305-071-1776	SCREW, CAP, HEXAGON HEAD: GENERATOR BASE MTG (96906) MS90725-123	EA		2	•	•	•	•	•	•	•	•	34	20
F 01082	5305-269-2808	SCREW, CAP, HEXAGON HEAD: SHIM MTG (96906) MS90726-65	EA		2	•	•	•	•	•	•	•	•	34	25
XDF 01083		SHIM: GENERATOR (97403) 13200E0945	EA		16									34	21
F 01084	5310-809-5998	WASHER, FLAT: GENERATOR BASE MTG (96906) MS27183-18	EA		4	•	•	•	•	•	•	•	•	34	19
F 01085	5310-721-3682	WASHER, FLAT: GENERATOR LEG TO TIE BAR (96906) MS15795-823	EA		4	•	•	•	•	•	•	•	•	34	12
F 01086	5310-655-9649	WASHER, FLAT: SHIM MTG (19207) 7050858 B	EA		2	•	•	•	•	•	•	•	•	34	23
XDD 01087		WASHER, LIFTING EYE: NONMETALLIC (28835) AW342 A	EA		1									34	9
F 01088	5310-581-5272	WASHER, LOCK: GENERATOR BASE MTG (96906) MS35338-29	EA		4	•	•	•	•	•	•	•	•	34	18
F 01089	5310-543-5713	WASHER, LOCK: GENERATOR LEG TO TIE BAR (96906) MS35338-51 B	EA		4	•	•	•	•	•	•	•	•	34	10
F 01090	5310-013-1046	WASHER, LOCK: GENERATOR TO BASE MTG (96906) MS35338-32 A	EA		4	•	•	•	•	•	•	•	•	34	10
F 01091	5310-637-9541	WASHER, LOCK: SHIM MTG (96906) MS35338-46 B	EA		2	•	•	•	•	•	•	•	•	34	24
01092		4401 - ROTOR ASSEMBLY													
P H R 01093	3431-089-8955	ARMATURE ASSEMBLY (28835) BW729 B	EA		1				•	•	•	4	5		
P H 01094	3110-107-7567	BEARING, BALL, ANNULAR: GENERATOR AND WELDER SHAFT (28835) BW406 A	EA		2	SEE	SMR	4405							
XDD 01095	6115-256-3829	COMMUTATOR: 85 DIVISION (28835) BW219	EA		1							•	•	33	6

(1) SMR CODE / INDEX NO.	(2) FEDERAL STOCK NUMBER	(3) DESCRIPTION REFERENCE NO. & MFR. CODE — USABLE ON CODE	(4) UNIT OF ISSUE	(5) QTY INC IN UNIT PACK	(6) QTY INC IN UNIT	(7) 30-DAY DS MAINT ALLOWANCE (a) 1-20	(b) 21-50	(c) 51-100	(8) 30-DAY GS MAINT ALLOWANCE (a) 1-20	(b) 21-50	(c) 51-100	(9) 1-YR ALW PER 100 EQUIP CNTGCY	(10) DEPOT MAINT ALW-PER 100 EQUIP	(11) ILLUSTRATION (a) FIG NO.	(b) ITEM NO.
XZF 00956	2520-352-6222	PLATE, FLOATING CLUTCH (61208) A3773	EA		1									30	32
XZF 00957		PLATE, HUB BACK (61208) A3774C	EA		1									30	39
XZO 00958	3010-360-4155	PLATE, IDENTIFICATION: CLUTCH (61208) A2012 — B	EA		1	SEE SMP 2210									
XZO 00959		PLATE, NAME: TWIN DISC (61208) A2018 — A	EA		1	SEE SMP 2210									
XZF 00960	5305-012-0628	SCREW, MACHINE: CLUTCH COVER MTG, 1/4-20 THD SIZE, 1/2 IN. LG (61208) MS0237	EA		3									30	29
F 00961	5305-725-3527	SETSCREW: BEARING TO PILLOW BLOCK (96906) MS51964-82	EA		2	•	•	•	•	•	•	•	•	30	11
F 00962	5305-281-4520	SETSCREW: HUB BACK PLATE TO SHAFT (61208) MS0388	EA		1	•	•	•	•	•	•	•	•	30	30
XZF 00963		SPACER: PILOT BEARING SHAFT, 1 3/8 IN. ID, 1 3/4 IN. OD, 0.108 IN. THK — A (58923) (9029-9	EA		1									30	26
P F 00964	5340-597-0701	SPRING, HELICAL, COMPRESSION: RELEASE (61208) A2667	EA		4	•	•	•	•	•	•	2	4	30	38
XZF 00965	3859-662-8756	WASHER, THRUST — A (61208) A2492	EA		1										
XZF 00966	3010-368-6472	YOKE ASSEMBLY, CLUTCH ADJUSTING (61208) A168	EA		1										
XZF 00967	3010-368-6473	LEVER, CLUTCH, SHIFTER (61208) A3535	EA		6									30	13
F 00968	5315-988-9791	PIN: LEVER (61208) 105	EA		3	•	•	•	•	•	•	•	•	30	16
F 00969	5315-568-7609	PIN, LOCK: CLUTCH ASSEMBLY (61208) A2221	EA		1	•	•	•	•	•	•	•	•	30	36
F 00970	5315-814-3530	PIN, SPRING: CLEVIS PIN, 1/4 IN. DIA, 5/8 IN. LG (96906) MS16562-35	EA		3	•	•	•	•	•	•	•	•	30	34

(1) SMR CODE / INDEX NO.	(2) FEDERAL STOCK NUMBER	(3) DESCRIPTION — REFERENCE NO. & MFR. CODE	USABLE ON CODE	(4) UNIT OF ISSUE	(5) QTY INC IN UNIT PACK	(6) QTY INC IN UNIT	(7) 30-DAY DS MAINT ALLOWANCE (a) 1-20	(b) 21-50	(c) 51-100	(8) 30-DAY GS MAINT ALLOWANCE (a) 1-20	(b) 21-50	(c) 51-100	(9) 1-YR ALW PER 100 EQUIP CNTDCY	(10) DEPOT MAINT ALW-PER 100 EQUIP	(11) ILLUSTRATION (a) FIG NO.	(b) ITEM NO
XZF 00986		RING, RETAINING; SHEAVE SPACER (80482) 5107-137	B	EA		1										
P F 00987	4940-971-4997	SEAL, OIL; BEARING (76854) 50352	B	EA		1	2	3	5	2	3	5	60	100		
P F 00988	2520-996-7168	SHAFT, POWER TAKE-OFF (16004) 30491	B	EA		1	•	•	•	•	•	•	4	5	30	17
P F 00989	4940-757-1886	SHAFT, SHOULDER; POWER TAKE-OFF (97403) 13200E9031-7	A	EA		1	•	•	2	•	•	2	6	5	30	17
XZF 00990		SHEAVE (16004) 30492	B	EA		1									30	24
XZF 00991		SPACER; BEARING (16004) 30488	B	EA		1										
XZF 00992		SPACER; BEARING (16004) 30490	B	EA		1										
XZF 00993		SPACER; SHEAVE (16004) 30489	B	EA		1									30	26
XZF 00994		WASHER, FLAT; SHAFT (16004) 31920	B	EA		1										
F 00995	5310-012-0214	WASHER, LOCK; DRIVING RING TO PULLEY (96906) MS35338-26		EA		6	•	•	•	•	•	•	•	•	30	22
XZF 00996	4940-861-3807	WASHER, SHAFT (16004) 23778	B	EA		1									30	27
XZF 00997	2520-734-7906	YOKE, HUB (78932) 516404	B	EA		1										
O 00998	5310-768-0319	NUT, PLAIN, HEXAGON; UPPER LINKAGE ASSEMBLY MTG (96906) MS51968-2	A	EA		2	•	•	•	•	•	•	•	•	23	12
F 00999	5310-045-1079	NUT, SELF-LOCKING, HEXAGON; HUB YOKE TO SHAFT (24617) 85079	A	EA		1	•	•	•	•	•	•	•	•	30	28
XZF 01000		PLATE, BEARING ANCHOR (97403) 13200E0982	A	EA		1									24	1

(1) SMR CODE / INDEX NO.	(2) FEDERAL STOCK NUMBER	(3) DESCRIPTION / REFERENCE NO. & MFR. CODE / USABLE ON CODE	(4) UNIT OF ISSUE	(5) QTY INC IN UNIT PACK	(6) QTY INC IN UNIT	(7) 30-DAY DS MAINT ALLOWANCE (a) 1-20	(b) 21-50	(c) 51-100	(8) 30-DAY GS MAINT ALLOWANCE (a) 1-20	(b) 21-50	(c) 51-100	(9) 1-YR ALW PER 100 EQUIP CNTGCY	(10) DEPOT MAINT ALW-PER 100 EQUIP	(11) ILLUSTRATION (a) FIG NO	(b) ITEM NO
01008		GROUP 22 - BODY, CHASSIS OR HULL, AND ACCESSORY ITEMS													
01009		2202 - ACCESSORY ITEMS													
P 0 01010	9905-205-2795	REFLECTOR, INDICATING, CLEARANCE: RED (96906) MS35387-1	EA		4	2	2	4	2	2	4	40	40	42	4
0 01011	5305-883-0633	SCREW, TAPPING, THREAD FORMING: REFLECTOR MTG (96906) MS24617-11	EA		8	•	•	•	•	•	•	•	•	42	3
01012		2210 - DATA PLATES													
XZF 01013		NAMEPLATE: OVERSPEED RESET A (28035) DW5027	EA		1										
XZO 01014		NAMEPLATE: RHEOSTAT (28035) 160A1408	EA		1										
XZO 01015		NAMEPLATE: WELDER GENERATOR (28035) AM2398	EA		1										
0 01016	5315-423-8038	PIN, DRIVE: NAME PLATE MTG (61205) 1333	EA		2	•	•	•	•	•	•	•	•		
0 01017	5315-423-3524	PIN, ESCUTCHEON: GOVERNOR NAMEPLATE MTG (77260) X455	EA		2	•	•	•	•	•	•	•	•		
XZO 01018		PLATE, GROUNDING: CONTROL PANEL B (16004) 33972	EA		1										
XZO 01019	3010-360-4155	PLATE, IDENTIFICATION: CLUTCH B (61205) A2012	EA		1										
XZF 01020	9905-807-3712	PLATE, IDENTIFICATION: CORPS OF ENGINEERS A	EA		1										
XZO 01021		PLATE, INSTRUCTION: DECLUTCHER (97403) 13200E0961	EA		1										
XZO 01022		PLATE, INSTRUCTION: GENERATOR ENGAGING AND DISENGAGING (97403) 13200E0962	EA		1										

(1) SMR CODE / INDEX NO.	(2) FEDERAL STOCK NUMBER	(3) DESCRIPTION REFERENCE NO. & MFR. CODE — USABLE ON CODE	(4) UNIT OF ISSUE	(5) QTY INC IN UNIT PACK	(6) QTY INC IN UNIT	(7) 30-DAY DS MAINT ALLOWANCE (a) 1-20	(b) 21-50	(c) 51-100	(8) 30-DAY GS MAINT ALLOWANCE (a) 1-20	(b) 21-50	(c) 51-100	(9) 1-YR ALW PER 100 EQUIP CNTGCY	(10) DEPOT MAINT ALW PER 100 EQUIP	(11) ILLUSTRATION (a) FIG NO.	(b) ITEM NO
0 01037	5305-011-3231	SCREW, DRIVE: TWIN DISH NAMEPLATE MTG (61208) 1333	EA		2	•	•	•	•	•	•	•	•		
0 01038	5305-855-0960	SCREW, TAPPING, THREAD CUTTING: DECLUTCHER INSTRUCTION PLATE MTG (96906) MS24629-39	EA		2	•	•	•	•	•	•	•	•		
F 01039	5305-855-0966	SCREW, TAPPING, THREAD CUTTING: OVERSPEED RESET NAMEPLATE MTG — A (96906) MS24629-39	EA		2	•	•	•	•	•	•	•	•		
F 01040	5305-057-9612	SCREW, TAPPING, THREAD FORMING: CORPS OF ENGINEERS PLATE MTG (96906) MS24621-30	EA		4	•	•	•	•	•	•	•	•		
0 01041	5305-879-3825	SCREW, TAPPING, THREAD FORMING: GENERATOR CLUTCH SHIFT LINKAGE NAMEPLATE MTG — B (96906) MS24637-1	EA		2	•	•	•	•	•	•	•	•		
0 01042	5305-879-3825	SCREW, TAPPING, THREAD FORMING: GROUNDING PLATE MTG — B (96906) MS24637-1	EA		2	•	•	•	•	•	•	•	•		
0 01043	5305-067-9896	SCREW, TAPPING, THREAD FORMING: THROTTLE INSTRUCTION PLATE MTG — B (96906) MS24621-55	EA		4	•	•	•	•	•	•	•	•		
0 01044	5305-855-1443	SCREW, TAPPING, THREAD FORMING: WELDER NAMEPLATE MTG (96906) MS24627-10	EA		4	•	•	•	•	•	•	•	•		
01045		GROUP 42 - ELECTRICAL EQUIPMENT													
01046		4216 - MISCELLANEOUS WIRING AND FITTINGS													
X20 01047		CABLE, ELECTRICAL: BATTERY CHARGING (00000) 7351202	EA		1									21	7
X20 01048	5940-501-8369	CLIP, TERMINAL (76545) 11C	EA		2									21	9
X20 01049	5935-258-9156	CONNECTOR, PLUG, ELECTRICAL: TWO MALE CONTACTS (00000) 7726602	EA		1									21	8
0 01050	5310-761-6882	NUT, PLAIN, HEXAGON: CLIP TO TERMINAL 1/4-20 THD SIZE (96906) MS51967-2	EA		2	•	•	•	•	•	•	•	•	21	11

(1) SMR CODE / INDEX NO.	(2) FEDERAL STOCK NUMBER	(3) DESCRIPTION — REFERENCE NO. & MFR. CODE	USABLE ON CODE	(4) UNIT OF ISSUE	(5) QTY INC IN UNIT PACK	(6) QTY INC IN UNIT	(7) 30-DAY DS MAINT ALLOWANCE (a) 1-20	(b) 21-50	(c) 51-100	(8) 30-DAY GS MAINT ALLOWANCE (a) 1-20	(b) 21-50	(c) 51-100	(9) 1-YR ALW PER 100 EQUIP CNTGCY	(10) DEPOT MAINT ALW-PER 100 EQUIP	(11) ILLUSTRATION (a) FIG NO.	(b) ITEM NO
X2H 01066		DYNAMOTOR, WELDER (28835) 8BW1584	B	EA		1										
X2F 01067		BOX ASSEMBLY: GENERATOR COVER (97403) 13200E0917	B	EA		1	SEE	GRP	4405							
X2F 01068	5315-042-3286	KEY, MACHINE: GENERATOR SHEAVE (96906) MS20067-250	B	EA		1	SEE	GRP	4404							
X2O 01069		NAMEPLATE: WELDER GENERATOR (28835) AW2398	B	EA		1	SEE	GRP	2210							
X2F 01070		PULLEY: GENERATOR DRIVE (16004) 33555	B	EA		1	SEE	GRP	4404							
O 01071	5305-855-1443	SCREW, TAPPING, THREAD FORMING: WELDER SERIAL No. PLATE MTG (96906) MS24627-10	B	EA		4	SEE	GRP	2210							
X2F R 01072		DYNAMOTOR, WELDER (28835) 8BW-1325	A	EA		1										
X2F 01073		PULLEY: GENERATOR DRIVE (28835) BM23791	A	EA		1	SEE	GRP	4404							
F 01074	5310-763-8905	NUT, PLAIN, HEXAGON: ADJUSTING SCREW (96906) MS51968-20		EA		4	•	•	•	•	•	•	•	•	32	11
F 01075	5310-763-8921	NUT, PLAIN, HEXAGON: GENERATOR BASE MTG (96906) MS51967-23		EA		4	•	•	•	•	•	•	•	•	32	15
F 01076	5310-732-0560	NUT, PLAIN, HEXAGON: GENERATOR LEG TO TIE BAR (96906) MS51968-14		EA		4	•	•	•	•	•	•	•	•	32	9
F 01077	5320-117-5522	RIVET, SOLID: SHIM TO GENERATOR BASE MTG 1/4 IN. DIA, COUNTER SUNK HEAD, 3/8 IN. GRIP	A	EA		16	•	•	•	•	•	•	•	•	32	22
F 01078	5305-725-4133	SCREW, CAP, HEXAGON HEAD: GENERATOR ADJUSTING (96906) MS90726-168	A	EA		4	•	•	•	•	•	•	•	•	32	26
F 01079	5305-725-4138	SCREW, CAP, HEXAGON HEAD: GENERATOR ADJUSTING (96906) MS90726-170	B	EA		4	•	•	•	•	•	•	•	•	32	26
F 01080	5305-071-1769	SCREW, CAP, HEXAGON HEAD: GENERATOR BASE MTG (96906) MS90725-115		EA		2	•	•	•	•	•	•	•	•	32	14

(1) SMR CODE / INDEX NO.	(2) FEDERAL STOCK NUMBER	(3) DESCRIPTION — REFERENCE NO. & MFR. CODE — USABLE ON CODE	(4) UNIT OF ISSUE	(5) QTY INC IN UNIT PACK	(6) QTY INC IN UNIT	(7) 20-DAY DS MAINT ALLOWANCE (a) 1-20	(b) 21-50	(c) 51-100	(8) 20-DAY GS MAINT ALLOWANCE (a) 1-20	(b) 21-50	(c) 51-100	(9) 1-YR ALW PER 100 EQUIP ENTDCY	(10) DEPOT MAINT ALW-PER 100 EQUIP	(11) ILLUSTRATION (a) FIG NO.	(b) ITEM NO
X2D 01096		COMMUTATOR: 22 DIVISION (28835) BM8870	EA		1							•	•	33	
X2D 01097		DISK, ARMATURE CORE EXCITER (28835) CW1158	EA		280							•	•		
X2M 01098		FAN: GENERATOR VENTILATION (28835) CW860	EA		1	SEE GRP 1406									
X2D 01099	6115-361-7827	FLANGE, CORE EXCITER (28835) BM687	EA		4							•	•		
X2D 01100	5970-795-1753	INSULATION: EXCITER (28835) AAM1556-4 B	EA		43							•	•		
X2D 01101		INSULATION, COIL (28835) BM2714-17 B	EA		33							•	•		
X2D 01102	5970-795-1752	INSULATION SHEET, ELECTRICAL: EXCITER (28835) AAM2704-1 B	EA		43							•	•		
X2D 01103		INSULATION, SLEEVING, ELECTRICAL (28835) CW661	EA		1							•	•		
X2D 0110A		INSULATION, SLOT (28835) 6FW2956-5 A	EA		3							•	•		
X2D 01105		INSULATION, SLOT: GENERATOR (28835) 6FW2950-5 B	EA		33							•	•		
X2D 01106		INSULATOR: CORE FLANGE (28835) 5CW3404 B	EA		1							•	•		
X2D 01107	5970-429-0958	INSULATOR, DISK (28835) CW1159	EA		2							•	•		
X2D 01108	5970-793-7805	INSULATOR, DISK (28835) 5CW3403	EA		1							•	•		
X2D 01109		INSULATOR, DISK: STEEL (28835) CW757	EA		60							•	•		
X2D 01110	5975-319-4176	INSULATOR, PLATE: FIBER (28835) CW760	EA		2							•	•		

(1) SMR CODE / INDEX NO.	(2) FEDERAL STOCK NUMBER	(3) DESCRIPTION — REFERENCE NO. & MFR. CODE	USABLE ON CODE	(4) UNIT OF ISSUE	(5) QTY INC IN UNIT PACK	(6) QTY INC IN UNIT	(7) 30-DAY DS MAINT ALLOWANCE (a) 1-20	(b) 21-50	(c) 51-100	(8) 30-DAY GS MAINT ALLOWANCE (a) 1-20	(b) 21-50	(c) 51-100	(9) 1-YR ALW PER 100 EQUIP CHTOCY	(10) DEPOT MAINT ALW-PER 100 EQUIP	(11) ILLUSTRATION (a) FIG NO.	(b) ITEM NO
X2D 01111		KEY: STEEL DISK (28835) 8BW1189-5	B	EA		1							•	•		
F 01112	5310-596-5182	NUT, PLAIN, HEXAGON: SHAFT END (28835) 5BA8	A	EA		2	•	•	•	•	•	•	•	•	33	1
X2H 01113		POLEPIECE, REVOLVING (28835) 8BW733		EA		4										
X2H 01114	6105-354-2365	RING, ELECTRICAL CONTACT (28835) 35J24		EA		1									33	21
X2D 01115		RING, WINDING, DAMPER (28835) 5CW1894		EA		2							•	•		
H 01116	5305-276-8354	SCREW, CAP, SOCKET HEAD: POLEPIECE MTG, 1/2-13 THD SIZE, 3 1/2 IN. LG		EA		8				•	•	•	•	•		
D 01117		SCREW, MACHINE: END PLATE MTG, CADMIUM OR ZINC PLATED, 1/4-20 THD SIZE, 1 9/16 IN. LG (28835) MW1471	A	EA		6							•	•	33	3
X2D 01118		SHAFT, ARMATURE (28835) 8BW1261	A	EA		1							•	•	33	7
X2D 01119		SHAFT, ARMATURE (28835) 8BW728	B	EA		1							•	•	33	7
X2D 01120		SPACER: BASE TO EXCITER CORE FLANGE (28835) 4DW371		EA		1							•	•		
X2D 01121		WEDGE, CORE, EXCITER (28835) DW2083-1		EA		43							•	•		
X2D 01122	6115-371-5472	WEDGE, ELECTRICAL, WINDING GENERATOR (28835) W193A		EA		66							•	•		
P H 01123	5970-698-7184	INSULATOR, PLATE (28835) AW7208		EA		4				•	2	2	12	20	20	2
X2H 01124	5999-458-7905	POLE PIECE, MAGNET: EXCITER FIELD (28835) BW97		EA		4									20	3
H 01125	5305-269-3215	SCREW, CAP, HEXAGON HEAD: POLEPIECE MTG (96906) MS90725-65		EA		4				•	•	•	•	•	20	20

(1) SMR CODE — INDEX NO.	(2) FEDERAL STOCK NUMBER	(3) DESCRIPTION — REFERENCE NO. & MFR. CODE — USABLE ON CODE	(4) UNIT OF ISSUE	(5) QTY INC IN UNIT PACK	(6) QTY INC IN UNIT	(7) 30-DAY DS MAINT ALLOWANCE (a) 1-20	(b) 21-50	(c) 51-100	(8) 30-DAY GS MAINT ALLOWANCE (a) 1-20	(b) 21-50	(c) 51-100	(9) 1-YR ALW PER 100 EQUIP CNTGCY	(10) DEPOT MAINT ALW-PER 100 EQUIP	(11) ILLUSTRATION (a) FIG NO.	(b) ITEM NO.
X2H 01140		WINDING: SHUNT (26835) 2005	EA		2									25	29
X2H 01141		WRAPPER: COMPOUND WINDING COIL (26835) BW354	EA		2									25	33
X2H 01142		WRAPPER: INTER POLE WINDING (26835) BW348	EA		4									25	36
01143		4403 - BRUSH HOLDER ASSEMBLY													
X2F 01144	5977-252-8858	HOLDER ASSEMBLY, ELECTRICAL CONTACT BRUSH (26835) J3976	EA		1										
X2F 01145	5977-285-0953	ARM ASSEMBLY, TENSION, SLIP RING BRUSH (26835) J395	EA		4									26	46
P F 01146	5977-284-7643	ARM, ELECTRICAL BRUSH (26835) AM634	EA		4	•	2	2	•	2	2	16	20	26	25
X1 01147	6115-354-2350	BEARING, SLEEVE: BRUSH RING MTG (26835) J347	EA		1									26	42
X1 01148		BEARING, SLEEVE: BRUSH RING MTG (26835) J750	EA		1									26	39
X1 01149	6115-374-5127	BEARING, SLEEVE: SPACER BRUSH RING MTG (26835) J346	EA		1									26	43
X1 01150	6115-374-5147	BEARING, SLEEVE: SPACER BRUSH RING MTG (26835) J569	EA		1									26	41
P O 01151	5977-361-7784	BRUSH, ELECTRICAL CONTACT: DC (26835) DA825	EA		4	8	17	33	8	17	33	400	400	34	19
P O 01152	5977-240-0381	BRUSH, ELECTRICAL CONTACT: EXCITER (26835) AAP16A	EA		4	8	17	33	8	17	33	400	400	34	20
X2F 01153	5977-447-4202	BUSHING, SLEEVE: TENSION LEVER SCREW (26835) AM667A	EA		8									26	26
X2F 01154	5977-374-5132	HOLDER ASSEMBLY, ELECTRICAL CONTACT BRUSH (26835) J392A	EA		2									26	38

(1) SMR CODE / INDEX NO.	(2) FEDERAL STOCK NUMBER	(3) DESCRIPTION — REFERENCE NO. & MFR. CODE — USABLE ON CODE	(4) UNIT OF ISSUE	(5) QTY INC. IN UNIT PACK	(6) QTY INC. IN UNIT	(7) 30-DAY DS MAINT ALLOWANCE (a) 1-20	(b) 21-50	(c) 51-100	(8) 30-DAY GS MAINT ALLOWANCE (a) 1-20	(b) 21-50	(c) 51-100	(9) 1-YR ALW PER 100 EQUIP CNTGCY	(10) DEPOT MAINT ALW-PER 100 EQUIP	(11) ILLUSTRATION (a) FIG NO.	(b) ITEM NO
F 01169	5310-809-4061	WASHER, FLAT: BRUSH RING MTG (96906) MS27183-15	EA		13	•	•	•	•	•	•	•	•	26	32
F 01170	5310-527-3289	WASHER, LOCK: BRUSH HOLDER TO RING MTG (96906) MS35333-23	EA		4	•	•	•	•	•	•	•	•	26	21
F 01171	5310-407-9566	WASHER, LOCK: BRUSH RING MTG (96906) MS35338-46	EA		4	•	•	•	•	•	•	•	•	26	31
F 01172	5310-582-5965	WASHER, LOCK: BRUSH RING MTG (96906) MS35338-44	EA		4	•	•	•	•	•	•	•	•	26	34
P F 01173	5330-202-1386	WASHER, NONMETALLIC: BRUSH RING MTG (28635) A25	EA		24	3	6	12	3	6	12	140	280	26	33
P F 01174	5977-735-6143	WASHER, SPRING ADJUSTING: BRUSH HOLDER (28635) AM638C	EA		8	2	2	3	2	2	3	32	40	26	23
P F 01175	5977-757-1891	HOLDER ASSEMBLY, ELECTRICAL CONTACT BRUSH (28635) BM10A	EA		1	•	•	•	•	•	•	4	5		
P O 01176	5977-655-2555	BRUSH, ELECTRICAL CONTACT: AC (28635) AM1470	EA		4	8	17	33	8	17	33	400	400	34	18
XZH 01177		CLAMP: BRUSH HOLDER RING MTG (28635) 120V74A	EA		4									25	13
P F 01178	5977-038-3118	HOLDER, ELECTRICAL, CONTACT BRUSH (28635) AM1156	EA		4	•	2	2	•	2	2	16	20	26	35
XI 01179	5977-319-0342	ARM, ELECTRICAL BRUSH: WELDED (28635) AM732	EA		4									25	25
XZF 01180	5977-447-4202	BUSHING, SLEEVE (28635) AM667A	EA		4									25	26
F 01181	5310-198-8191	NUT, PLAIN, HEXAGON: BRUSH ARM AND SPRING MTG, 1/4 IN., 20 THD SIZE	EA		4	•	•	•	•	•	•	•	•	25	18
XZF 01182	5977-429-0936	PLATE AND GUIDE (28635) AM696	EA		1									25	20
F 01183	5305-068-0498	SCREW, CAP, HEXAGON HEAD: BRUSH LEAD TO BRUSH HOLDER MTG (96906) MS90725-1	EA		4	•	•	•	•	•	•	•	•	25	16

(1) SMR CODE / INDEX NO.	(2) FEDERAL STOCK NUMBER	(3) DESCRIPTION — REFERENCE NO. & MFR. CODE / USABLE ON CODE	(4) UNIT OF ISSUE	(5) QTY INC IN UNIT PACK	(6) QTY INC IN UNIT	(7) 30-DAY DS MAINT ALLOWANCE (a) 1-20	(b) 21-50	(c) 51-100	(8) 30-DAY GS MAINT ALLOWANCE (a) 1-20	(b) 21-50	(c) 51-100	(9) 1-YR ALW PER 100 EQUIP CNTGCY	(10) DEPOT MAINT ALW-PER 100 EQUIP	(11) ILLUSTRATION (a) FIG NO.	(b) ITEM NO
P F 01198	3030-087-2994	BELT, V, MATCHED SET: GENERATOR DRIVE (96906) MS51067-6A-4 B	EA		1	2	3	5	2	3	5	60	50	33	9
F 01199	5306-225-8504	BOLT, MACHINE: PULLEY TO HUB MTG (96906) MS90725-40 A	EA		3	•	•	•	•	•	•	•	•	33	10
XDF 01200		HUB: GENERATOR DRIVE (28835) 8423791-1 A	EA		1									33	14
F 01201	5315-042-3286	KEY, MACHINE: GENERATOR SHEAVE (96906) MS20067-250 B	EA		1	•	•	•	•	•	•	•	•	33	8
XDF 01202		KEY, MACHINE: GENERATOR SHAFT TO PULLEY (28835) C31 A	EA		1									33	6
XDF 01203		PULLEY: GENERATOR DRIVE (28835) 8423791 A	EA		1									33	12
XDF 01204		PULLEY: GENERATOR DRIVE (16004) 33995 B	EA		1									33	12
F 01205		SETSCREW: HUB TO SHAFT (96906) MS51041-51 A	EA		1	•	•	•	•	•	•	•	•	33	13
F 01206	5310-043-2226	WASHER, LOCK: PULLEY TO HUB MTG (96906) MS35338-34 A	EA		3	•	•	•	•	•	•	•	•	33	11
01207		4405 - FRAME SUPPORT, HOUSING, CARRIER													
P H 01209	3110-107-7567	BEARING, BALL, ANNULAR: GENERATOR AND WELDER SHAFT (28835) 88A06	EA		2				•	•	2	8	20	33	2
O 01210	5306-225-8497	BOLT, MACHINE: COVER AND GUARD MTG	EA		3	•	•	•	•	•	•	•	•	34	30
O 01211	5306-225-8497	BOLT, MACHINE: COVER TO END BELL MTG	EA		3	•	•	•	•	•	•	•	•	33	15
XDF 01213		BOX ASSEMBLY: GENERATOR COVER (97403) 13200E0917 A	EA		1										
XDF 01214		BOLT, DRAW: TOP TO BOX (97403) 13200E0920 B	EA		4									44	4

(1) SMR CODE — INDEX NO.	(2) FEDERAL STOCK NUMBER	(3) DESCRIPTION — REFERENCE NO. & MFR. CODE	USABLE ON CODE	(4) UNIT OF ISSUE	(5) QTY INC IN UNIT PACK	(6) QTY INC IN UNIT	(7) 30-DAY DS MAINT ALLOWANCE (a) 1-20	(b) 21-50	(c) 51-100	(8) 30-DAY GS MAINT ALLOWANCE (a) 1-20	(b) 21-50	(c) 51-100	(9) 1-YR ALW PER 100 EQUIP ENTGCY	(10) DEPOT MAINT ALW-PER 100 EQUIP	(11) ILLUSTRATION (a) FIG NO.	(b) ITEM NO
X20 01230		GUARD, SHAFT (28035) A2563	A	EA		1									34	25
X2H 01231		HOUSING: MOTOR ASSY (28035) 8W730		EA		1									26	5
X2H 01232		HOUSING, GENERATOR: WELDED END (28035) 8W732		EA		1									42	12
X2H 01233	5970-429-0955	INSULATOR, BUSHING (28035) CW1163		EA		2									26	18
F 01234	5310-012-0614	NUT, PLAIN, HEXAGON: BOX TO ANGLE (96906) MS35650-102	B	EA		1	•	•	•	•	•	•	•	•	44	19
F 01235	5310-042-6903	NUT, PLAIN, HEXAGON: PANEL MTG (00000) 426903	A	EA		8	•	•	•	•	•	•	•	•	34	6
X2F 01236		PANEL, FRONT: GENERATOR COVER (28035) 8W1257	A	EA		1									34	8
X2F 01237		PANEL, REAR: GENERATOR COVER (28035) 8W1258	A	EA		1									34	3
X2F 01238		PANEL, RIGHT AND LEFT: GENERATOR COVER (28035) 8W1259	A	EA		2									34	4
H 01239	5305-269-4511	SCREW, CAP, HEXAGON HEAD: EXCITER HOUSING TO GENERATOR (96906) MS90725-63		EA		4				•	•	•	•	•	26	19
F 01240	5305-989-7934	SCREW, MACHINE: BOX TO ANGLE (96906) MS35207-263	B	EA		1	•	•	•	•	•	•	•	•	44	15
F 01241	5305-989-6265	SCREW, MACHINE: PANEL MTG (96906) MS35207-262	A	EA		8	•	•	•	•	•	•	•	•	34	7
F 01242	5305-279-4312	SCREW, TAPPING, THREAD FORMING: PANELS TO GENERATOR (96906) MS35045-3	A	EA		4	•	•	•	•	•	•	•	•	34	27
X2F 01243		SHIM: BEARING END PLAY .046 IN, THK (28035) AW734 (AS REQUIRED)		EA											33	19

(1) SMR CODE / INDEX NO.	(2) FEDERAL STOCK NUMBER	(3) DESCRIPTION REFERENCE NO. & MFR. CODE — USABLE ON CODE	(4) UNIT OF ISSUE	(5) QTY INC IN UNIT PACK	(6) QTY INC IN UNIT	(7) 30-DAY DS MAINT ALLOWANCE (a) 1-20	(b) 21-50	(c) 51-100	(8) 30-DAY GS MAINT ALLOWANCE (a) 1-20	(b) 21-50	(c) 51-100	(9) 1-YR ALW PER 100 EQUIP CATG'Y	(10) DEPOT MAINT ALW PER 100 EQUIP	(11) ILLUSTRATION (a) FIG NO.	(b) ITEM NO.
0 01258	5305-988-1723	SCREW, MACHINE: FAN GUARD ASSY MTG (96906) MS35206-279	B EA		1	•	•	•	•	•	•	•	•	34	6
0 01259	5305-988-1171	SCREW, MACHINE: FILTER MTG (96906) MS35206-267	EA		4	•	•	•	•	•	•	•	•		
0 01260	5305-011-6286	SCREW, MACHINE: WRAPPER ASSY MTG (24617) 116286	EA		6	•	•	•	•	•	•	•	•	34	17
0 01261		SCREW, TAPPING, THREAD CUTTING: FAN GUARD MTG (96906) MS24629-21	A EA		4	•	•	•	•	•	•	•	•	34	6
0 01262		WASHER, FLAT: FILTER MTG (96906) MS27183-10	EA		4	•	•	•	•	•	•	•	•	34	4
0 01263	5310-889-2528	WASHER, LOCK: FILTER MTG (96906) MS35338-68	EA		14	•	•	•	•	•	•	•	•	34	2
X20 01264	3431-970-6259	WRAPPER ASSEMBLY (28835) 88757	EA		2									34	16
01265		4407 - CONTROL PANELS HOUSING, CUBICLES													
X2F 01266		HARNESS, WIRE: CONTROL PANEL TO EXCITER (97403) 13200E0982	EA		1										
M F 01267		INSULATION TAPE, ELECTRICAL MANUFACTURE FROM:	EA		1										
P F 01268	5970-289-8910	INSULATION TAPE, ELECTRICAL (20 FT REQUIRED)	RL			SEE MFP 9901									
X2F 01269		LOCK, WIRE: 3/16 IN. ID, 7/16 IN. OD (71002) 3029	EA		1										
X2F 01270		SLEEVE, INSULATOR: PLASTIC (79550) 835	EA		6										
X2F 01271	5940-542-9966	TERMINAL, LUG (96906) MS35436-6	EA		6										

(1) SMR CODE / INDEX NO.	(2) FEDERAL STOCK NUMBER	(3) DESCRIPTION REFERENCE NO. & MFR. CODE — USABLE ON CODE	(4) UNIT OF ISSUE	(5) QTY INC IN UNIT PACK	(6) QTY INC IN UNIT	(7) 30-DAY DS MAINT ALLOWANCE (a) 1-30	(b) 31-50	(c) 51-100	(8) 30-DAY GS MAINT ALLOWANCE (a) 1-20	(b) 21-50	(c) 51-100	(9) 1-YR ALW PER 100 EQUIP CNTGCY	(10) DEPOT MAINT ALW-PER 100 EQUIP	(11) ILLUSTRATION (a) FIG NO.	(b) ITEM NO
P H 01126	6115-354-2313	WINDING, GENERATOR FIELD (28035) DATA1512	EA		4				•	2	2	12	20	26	1
01127		4402 - STATOR ASSEMBLY													
X2H 01128		COIL: MAIN GENERATOR, LEFT HAND (28035) 8A242	EA		1									25	45
X2H 01129		COIL: MAIN GENERATOR, RIGHT HAND AND BOTTOM (28035) 8A240	EA		2									25	37
X2H 01130		COIL: MAIN GENERATOR, TOP (28035) 8A246	EA		1									25	38
X2H 01131		COIL ASSEMBLY: LEFT HAND (28035) 8A600	EA		1									25	48
X2H 01132		COIL ASSEMBLY: RIGHT HAND (28035) 8A601	EA		1									25	46
X2H 01133		INSULATOR: SHUNT WINDING (28035) 8A912	EA		2									25	20
X2H 01134		PLUG, HAT: GENERATOR HOUSING, 4-1/2 IN. (28035) 8A697	EA		2									25	32
X2H 01135		PLUG, HAT: GENERATOR HOUSING, 5-1/2 IN. (28035) 8A264	EA		2									25	34
X2H 01136		POLE PIECE (28035) 8A208	EA		4									25	35
H 00137	5305-269-3215	SCREW, CAP, HEXAGON HEAD: PLUG HAT MTG (96906) MS90725-65	EA		12				•	•	•	•	•	25	15
X2H 01138		STATOR: MOTOR END (28035) DA1A1301	EA		1									26	29
X2H 01139		STRIP, INSULATION: SHUNT WINDING (28035) 8A913 (AS REQUIRED)	EA											25	31

(1) SMR CODE / INDEX NO.	(2) FEDERAL STOCK NUMBER	(3) DESCRIPTION — REFERENCE NO. & MFR. CODE — USABLE ON CODE	(4) UNIT OF ISSUE	(5) QTY INC IN UNIT PACK	(6) QTY INC IN UNIT	(7) 30-DAY DS MAINT ALLOWANCE (a) 1-20	(b) 21-50	(c) 51-100	(8) 30-DAY GS MAINT ALLOWANCE (a) 1-20	(b) 21-50	(c) 51-100	(9) 1-YR ALW PER 100 EQUIP CNTGCY	(10) DEPOT MAINT ALW PER 100 EQUIP	(11) ILLUSTRATION (a) FIG NO.	(b) ITEM NO.
XJ 01155	5977-429-0936	HOLDER, ELECTRICAL, CONTACT BRUSH (28835) AM696	EA		2									26	38
P F 01156	5970-699-9618	INSULATOR, BRUSH HOLDER STUD (28835) AM626	EA		4	2	2	4	2	2	4	40	40	26	37
P F 01157	5970-378-5128	INSULATOR, BUSHING (28835) J348	EA		2	•	2	2	•	2	2	20	20	26	49
F 01158	5310-198-8191	NUT, PLAIN, HEXAGON: BRUSH ASM MTG, 1/4-20 THD SIZE	EA		8	•	•	•	•	•	•	•	•	26	44
XF 01159	5977-251-4055	RING, HOLDER, ELECTRICAL BRUSH (28835) J144A	EA		1									26	40
XF 01160	5977-378-5043	RING, HOLDER, ELECTRICAL BRUSH: INNER (28835) AM630	EA		1									26	36
XF 01161	5977-496-5178	RING, HOLDER, ELECTRICAL BRUSH: OUTER (28835) AM631A	EA		1									26	48
F 01162	5305-225-3840	SCREW, CAP, HEXAGON: BRUSH ASM MTG (96906) MS90725-7	EA		8	•	•	•	•	•	•	•	•	26	27
F 01163	5305-269-3218	SCREW, CAP, HEXAGON HEAD: BRUSH RING MTG (96906) MS90725-68	EA		2	•	•	•	•	•	•	•	•	26	28
F 01164		SCREW, CAP, HEXAGON HEAD: BRUSH RING MTG, 3/8-16 THD SIZE, 2-1/2 IN. LG, HEAD DRILLED AND TAPPED NO. 10-32 THD SIZE (28835) J598	EA		2	•	•	•	•	•	•	•	•	26	30
F 01165	5305-988-1721	SCREW, MACHINE: BRUSH HOLDER TO RING (96906) MS35206-277	EA		8	•	•	•	•	•	•	•	•	26	22
F 01166	5305-052-6913	SCREW, TAPPING, THREAD CUTTING: FIELD AND BRUSH LEAD TO BRUSH HOLDER (96906) MS24629-33	EA		12	•	•	•	•	•	•	•	•	26	47
P F 01167	5977-669-4992	SPRING, HOLDER, TORSION: BRUSH (28835) W799092	EA		2	•	2	2	•	2	2	20	40	26	45
P F 01168	3432-569-6741	SPRING, HELICAL, TORSION: BRUSH TENSION (28835) W799091	EA		8	2	3	7	2	3	7	80	80	26	24

(1) SMR CODE / INDEX NO.	(2) FEDERAL STOCK NUMBER	(3) DESCRIPTION REFERENCE NO. & MFR. CODE — USABLE ON CODE	(4) UNIT OF ISSUE	(5) QTY INC IN UNIT PACK	(6) QTY INC IN UNIT	(7) 30-DAY DS MAINT ALLOWANCE (a) 1-20	(b) 21-30	(c) 31-100	(8) 30-DAY GS MAINT ALLOWANCE (a) 1-20	(b) 21-30	(c) 31-100	(9) 1-YR ALW PER 100 EQUIP IN TYCCY	(10) DEPOT MAINT ALW-PER 100 EQUIP	(11) ILLUSTRATION (a) FIG NO.	(b) ITEM NO
F 01185	5305-225-3840	SCREW, CAP, HEXAGON HEAD: FIELD LEAD TO BRUSH HOLDER MTG (96906) MS90725-7	EA		4	•	•	•	•	•	•	•	•	25	27
P F 01185	5977-598-9051	SPRING, HELICAL, TORSION: BRUSH (28835) W7959113	EA		4	2	2	4	2	2	4	40	80	25	24
F 01186	5310-351-1067	WASHER, SPRING ADJUSTING, BRUSH HOLDER (28835) AA638A	EA		4	•	•	•	•	•	•	•	•	25	23
F 01187	5310-619-3555	NUT, PLAIN, HEXAGON: BRUSH HOLDER MTG, 1/4-20 THD SIZE	EA		12	•	•	•	•	•	•	•	•	25	22
XZH 01188		RING: BRUSH HOLDER MTG (28835) 120W962	EA		1									25	43
H 01189	5305-069-8495	SCREW, CAP, HEXAGON HEAD: BRUSH HOLDER CLAMP	EA		4				•	•	•	•	•	25	14
XZF 01190		SCREW, MACHINE: BRUSH HOLDER MTG (28853) 5048310	EA		12									25	42
XZF 01191		SPACER (28835) AA1683	EA		4									25	17
XZF 01192	6115-293-5742	SPACER: BRUSH HOLDER (28835) AA740	EA		4									25	19
F 01193	5305-855-0979	WASHER, LOCK: BRUSH HOLDER MTG (96906) MS24629-25	EA		12	•	•	•	•	•	•	•	•	25	21
XZF 01194		LEAD, BRUSH HOLDER (28835) 8AA797	EA		1									25	44
H 01195	5305-010-2732	SETSCREW: BRUSH RING MTG	EA		2				•	•	•	•	•	26	4
01196		4404 - DRIVE COMPONENTS													
P F 01197	3030-234-2244	BELT, V, MATCHED SET: GENERATOR DRIVE (81300) B63 (ON REPLACEMENT OF BELTS, 4 ARE REQUIRED)	EA		4	2	3	5	2	3	5	60	50	33	9

(1) SMR CODE / INDEX NO.	(2) FEDERAL STOCK NUMBER	(3) DESCRIPTION — REFERENCE NO. & MFR. CODE — USABLE ON CODE	(4) UNIT OF ISSUE	(5) QTY INC IN UNIT PACK	(6) QTY INC IN UNIT	(7) 30-DAY DS MAINT ALLOWANCE (a) 1-20	(b) 21-50	(c) 51-100	(8) 30-DAY GS MAINT ALLOWANCE (a) 1-20	(b) 21-50	(c) 51-100	(9) 1-YR ALW PER 100 EQUIP CNTGCY	(10) DEPOT MAINT ALW-PER 100 EQUIP	(11) ILLUSTRATION (a) FIG NO.	(b) ITEM NO.
X2F 01215		BOX: GENERATOR COVER (16004) 33578 B	EA		1									44	6
F 01216	5320-754-0822	RIVET, SOLID: DRIVE BOLT HTR (96906) MS20470AD4-5 B	EA		10	•	•	•	•	•	•	•	•	44	3
X2F 01217		TOP ASSEMBLY: GENERATOR BOX (16004) 33579 B	EA		1									44	5
X2H 01218		BUSHING, FIBER: EXCITER HOUSING, WELDER END (28735) CW1163 A	EA		2									25	39
X2F 01219		CAP, BEARING (28835) AA458	EA		2									33	18
X2F 01220		CAP, GENERATOR: BEARING (28835) CW156A B	EA		1									33	22
X2F 01221		CONDUIT, FLEXIBLE: GENERATOR TO PANEL (16004) 33574 B	EA		1									44	1
X2F 01222	4040-888-2896	CONDUIT, FLEXIBLE: GENERATOR TO PANEL (77111) EWC566-300 A	EA		1									35	1
X2F 01223		CONNECTOR: CONDUIT (03743) 375316 A	EA		1									35	2
X2F 01224		CONNECTOR: CONDUIT (59730) 316 B	EA		2									44	2
X1 01225	5975-518-315	LOCKNUT, ELECTRICAL: CONDUIT (24447) SP148 A	EA		1										
X1 01226	5975-536-5341	LOCKNUT, ELECTRICAL: CONDUIT (24447) SP129 A	EA		1										
X2G 01227		COVER: GENERATOR (28835) CW869 A	EA		1									34	8
X2F 01228		COVER, END: MOTOR END (28835) CW743	EA		2									33	16
P F 01229	3432-298-5537	GASKET: BEARING CAP (28835) CW1160	EA		2	2	3	6	2	3	6	72	200	33	20

(1) SMR CODE / INDEX NO.	(2) FEDERAL STOCK NUMBER	(3) DESCRIPTION — REFERENCE NO. & MFR. CODE	USABLE ON CODE	(4) UNIT OF ISSUE	(5) QTY INC IN UNIT PACK	(6) QTY INC IN UNIT	(7) 30-DAY DS MAINT ALLOWANCE (a) 1-20	(b) 21-30	(c) 31-100	(8) 30-DAY GS MAINT ALLOWANCE (a) 1-20	(b) 21-30	(c) 31-100	(9) 1-Yr ALW PER EQUIP ENTITY	(10) DEPOT MAINT ALW-PER 100 EQUIP	(11) ILLUSTRATION (a) FIG NO.	(b) ITEM NO
XZF 01243		SHIM: BEARING END PLAY .056 IN. THK (28035) AL583		EA											33	19
F 01245	5310-080-6008	WASHER, FLAT: BOX MTG (96906) MS27183-14	B	EA		2	•	•	•	•	•	•	•	•	44	16
F 01246	5310-043-2226	WASHER, LOCK: BOX TO ANGLE (96906) MS35338-24	B	EA		1	•	•	•	•	•	•	•	•	44	18
0 01247	5310-012-0214	WASHER, LOCK: COVER AND GUARD MTG (96906) MS35338-26		EA		3	•	•	•	•	•	•	•	•	34	31
F 01248	5330-080-9786	WASHER, LOCK: PANEL MTG (96906) MS19904-60	A	EA		8	•	•	•	•	•	•	•	•	32	5
P F 01249	5330-584-2109	WASHER, NONMETALLIC: BEARING CAP (28035) A29		EA		2	2	3	6	2	3	6	72	200	33	17
01250		4406 - VENTILIATION, COOLING SYSTEM														
X2H 01251		FAN: GENERATOR VENTILIATION (28035) CM860		EA		1									33	9
X20 01252	6115-887-8848	FILTER, AIR, GENERATOR (28035) CM764		EA		2									34	1
X20 01253		GUARD ASSEMBLY: FAN (28035) SCM5228	A	EA		1									34	7
X20 01254		GUARD ASSEMBLY, FAN (28035) CM1572	B	EA		1									34	7
0 01255	5310-761-6882	NUT, PLAIN, HEXAGON: FILTER MTG (96906) MS51967-2		EA		4	•	•	•	•	•	•	•	•		
0 01256	5310-761-6882	NUT, PLAIN, HEXAGON: WRAPPER TO FILTER AND GENERATOR SCREW (96906) MS51967-2		EA		10	•	•	•	•	•	•	•	•	34	3
0 01257		NUT, PLAIN, WING: FILTER MTG (96906) MS35425-13		EA		4	•	•	•	•	•	•	•	•	34	5

(1) SMR CODE / INDEX NO.	(2) FEDERAL STOCK NUMBER	(3) DESCRIPTION — REFERENCE NO. & MFR. CODE — USABLE ON CODE	(4) UNIT OF ISSUE	(5) QTY INC IN UNIT PACK	(6) QTY INC IN UNIT	(7) 30-DAY DS MAINT ALLOWANCE (a) 1-20	(b) 21-50	(c) 51-100	(8) 30-DAY GS MAINT ALLOWANCE (a) 1-20	(b) 21-50	(c) 51-100	(9) 1-YR ALW PER 100 EQUIP IN TOCY	(10) DEPOT MAINT ALW-PER 100 EQUIP	(11) ILLUSTRATION (a) FIG NO.	(b) ITEM NO.
XZF 01272	5940-681-9713	TERMINAL, LUG (96906) MS20659-4	EA		6										
XZF 01273	6940-888-2882	LEAD, ELECTRICAL: 10 RANGE SWITCH POSITION NO. SEVEN TERMINAL BLOCK (97403) 13200A0975-1	EA		1									35	5
XZF 01274	6940-896-7229	LEAD, ELECTRICAL: 10 RANGE SWITCH TO GENERATOR (97403) 13200E0978-7	EA		1									35	2
XZF 01275	6940-896-7232	LEAD, ELECTRICAL: 10 RANGE SWITCH TO GENERATOR (97403) 13200E0978-1	EA		1										
XZF 01276	6940-896-7227	LEAD, ELECTRICAL: 10 RANGE SWITCH TO GENERATOR WELDER (97403) 13200E0978-8	EA		1									35	4
XZF 01277	6940-896-7228	LEAD, ELECTRICAL: 10 RANGE SWITCH TO GENERATOR WELDER (97403) 13200E0978-2	EA		1									35	31
XZF 01278	6940-896-7230	LEAD, ELECTRICAL: 10 RANGE SWITCH TO GENERATOR WELDER, 6 FT LG (97403) 13200E0978-6	EA		1									35	3
XZF 01279	6940-896-7231	LEAD, ELECTRICAL: 10 RANGE SWITCH TO GENERATOR WELDER (97403) 13200E0978-5	EA		1									35	1
XZF 01280	6940-896-7233	LEAD, ELECTRICAL: 10 RANGE SWITCH TO GENERATOR WELDER (97403) 13200E0978-3	EA		1										
XZF 01281	6940-896-7234	LEAD, ELECTRICAL: 10 RANGE SWITCH TO GENERATOR WELDER (97403) 13200E0978-4	EA		1									35	32
XZF 01282	6940-888-2889	LEAD, ELECTRICAL: CONTROL PANEL MOVEABLE POINT TO GENERATOR WELDER (97403) 13200E0980-2	EA		1									35	7
XZF 01283	6940-888-2886	LEAD, ELECTRICAL: CONTROL PANEL MOVEABLE POINT TO GENERATOR WELDER (97403) 13200E0980-3	EA		1										
XZF 01284	6940-888-2887	LEAD ELECTRICAL: CONTROL PANEL MOVEABLE POINT TO GENERATOR WELDER (97403) 13200E0980-4	EA		1										

(1) SMR CODE / INDEX NO.	(2) FEDERAL STOCK NUMBER	(3) DESCRIPTION — REFERENCE NO. & MFR. CODE	USABLE ON CODE	(4) UNIT OF ISSUE	(5) QTY INC IN UNIT PACK	(6) QTY INC IN UNIT	(7) 30-DAY DS MAINT ALLOWANCE (a) 1-20	(b) 21-50	(c) 51-100	(8) 30-DAY GS MAINT ALLOWANCE (a) 1-20	(b) 21-50	(c) 51-100	(9) 1-YR ALW PER 100 EQUIP CNTGCY	(10) DEPOT MAINT ALW-PER 100 EQUIP	(11) ILLUSTRATION (a) FIG NO.	(b) ITEM NO.
X2F 01285	4940-888-2883	LEAD, ELECTRICAL: ELECTRODE TO GENERATOR WELDER (97403) 13200E0979-2		EA		1									35	8
X2F 01286	4940-888-2884	LEAD, ELECTRICAL: PANEL BOARD MOVEABLE TO GENERATOR WELDER (97403) 13200E0980-1		EA		1									35	6
X2F 01287	4940-888-2888	LEAD, ELECTRICAL: PANEL BOARD 100v RECEPTACLE TO GENERATOR, 4 FT 8 IN. LG (97403) 13200E0980-5		EA		2										
F 01288	5310-732-0558	NUT, PLAIN, HEXAGON: WIRE CONNECTOR TO 10 WAY SWITCH (96906) MS51967-8		EA		8	*	*	*	*	*	*	*	*	35	9
X2F 01289		PANEL ASSEMBLY, CONTROL (28835) 8BW1282	A	EA		1										
X2F 01290		PANEL ASSEMBLY, CONTROL (28835) 8BW1563	B	EA		1										
X2F 01291		ADAPTER, RHEOSTAT (28835) DW4020	B	EA		1	SEE GRP 4411									
X2F 01292	6625-842-0896	AMMETER (28835) W8062-11	B	EA		1									36	16
P F 02193	6625-252-5545	AMMETER: BATTERY (85925) D2076	B	EA		1	*	*	2	*	*	2	6	5	35	20
X20 01294		BLOCK, TERMINAL (28835) 10J225	B	EA		1	SEE GRP 4408									
X20 01295		BLOCK, TERMINAL (28835) 8BW1520	B	EA		2	SEE GRP 4408									
X2F 01296		BLOCK, TERMINAL: 110/220 v, 4kw AND 220v, 7.5w (28835) 10J228	A	EA		6	SEE GRP 4408									
X20 01297		BRACKET: LOOP CLAMP MTG (28835) 8BW1542	B	EA		5									45	11
X2F 01298		BRACKET, CAPACITOR (28835) 8BW828	A	EA		1	SEE GRP 4414									

(1) SMR CODE / INDEX NO.	(2) FEDERAL STOCK NUMBER	(3) DESCRIPTION — REFERENCE NO. & MFR. CODE — USABLE ON CODE	(4) UNIT OF ISSUE	(5) QTY INC IN UNIT PACK	(6) QTY INC IN UNIT	(7) 30-DAY DS MAINT ALLOWANCE (a) 1-20	(b) 21-50	(c) 51-100	(8) 30-DAY GS MAINT ALLOWANCE (a) 1-20	(b) 21-50	(c) 51-100	(9) 1-YR ALW PER 100 EQUIP CNTGCY	(10) DEPOT MAINT ALW-PER 100 EQUIP	(11) ILLUS-TRATION (a) FIG NO.	(b) ITEM NO
P 0 01314	5920-539-6920	FUSE, CARTRIDGE: 30 AMP (75915) 314030 B	EA		3	SEE GRP 4409									
P F 01315	5920-892-9311	FUSEHOLDER (75915) 342001 B	EA		6	SEE GRP 4409									
X20 01316		GUARD ASSEMBLY: TERMINAL BLOCK (28835) 88M1517	EA		1	SEE GRP 4408									
X2F 01317		INSULATOR: RELAY MTG BRACKET (28835) 88M747	EA		1	SEE GRP 4410									
P F 01318	5970-669-9618	INSULATOR, BRUSH HOLDER STUD: TERMINAL STUD (28835) AM626	EA		8	SEE GRP 4408									
X2F 01319	6625-269-8023	METER, ELECTRICAL FREQUENCY (02505) 30FX A	EA		1									36	19
X2F 01320		METER, ELECTRICAL FREQUENCY (02505) 30FHX-XRUG B	EA		1									36	19
X2F 01321	6645-736-0182	METER, TIME TOTALIZING (28835) V9917-2	EA		1	SEE GRP 4703									
X20 01322		NAMEPLATE: RHEOSTAT (28835) 160A1406	EA		1	SEE GRP 2210									
0 01323	5310-543-5656	NUT, PLAIN, HEXAGON: CAPACITOR MTG (96906) MS35691-402 B	EA		2	SEE GRP 4414									
F 01324	5310-012-0622	NUT, PLAIN, HEXAGON: CONNECTOR MTG (96906) MS35649-82 A	EA		3	SEE GRP 4408									
0 01325	5310-768-0319	NUT, PLAIN, HEXAGON: LOOP CLAMP BRACKET MTG (96906) MS51968-2 B	EA		2	•	•	•	•	•	•	•	•	45	7
0 01326	5310-012-0622	NUT, PLAIN, HEXAGON: LOOP CLAMP BRACKET MTG (96906) MS35649-82 B	EA		2	•	•	•	•	•	•	•	•	45	16
0 01327	5310-013-4530	NUT, PLAIN, HEXAGON: LOOP CLAMP MTG (96906) MS35649-62 B	EA		7	•	•	•	•	•	•	•	•	45	4
0 01328	5310-761-6882	NUT, PLAIN, HEXAGON: PANEL GROUNDING (96906) MS51967-2 R	EA		1	•	•	•	•	•	•	•	•	45	21

(1) SMR CODE / INDEX NO.	(2) FEDERAL STOCK NUMBER	(3) DESCRIPTION — REFERENCE NO. & MFR. CODE / USABLE ON CODE		(4) UNIT OF ISSUE	(5) QTY INC IN UNIT PACK	(6) QTY INC IN UNIT	(7) 30-DAY DS MAINT ALLOWANCE (a) 1-20	(b) 21-50	(c) 51-100	(8) 30-DAY GS MAINT ALLOWANCE (a) 1-20	(b) 21-50	(c) 51-100	(9) 1-YR ALW PER 100 EQUIP CNTGCY	(10) DEPOT MAINT ALW-PER 100 EQUIP	(11) ILLUSTRATION (a) FIG NO.	(b) ITEM NO
F 01344	5305-044-4153	SCREW, CAP, HEXAGON HEAD: CABLE CLAMP TO ROTARY SWITCH (96906) MS90725-109	B	EA		1	•	•	•	•	•	•	•	•		
F 01345	5305-781-3924	SCREW, CAP, HEXAGON HEAD: LEAD TO SHUNT MTG (96906) MS90725-107	A	EA		1	•	•	•	•	•	•	•	•	36	47
O 01346	5305-071-2241	SCREW, CAP, HEXAGON HEAD: PANEL GROUNDING (96906) MS90725-10	B	EA		1	•	•	•	•	•	•	•	•	45	18
F 01347	5305-068-0501	SCREW, CAP, HEXAGON HEAD: RESISTOR SWITCH ASSY (96906) MS90725-5	B	EA		3	SEE GRP 2210									
F 01348	5305-068-0501	SCREW, CAP, HEXAGON HEAD: ROTARY SWITCH MTG (96906) MS90725-5	B	EA		4	SEE GRP 2210									
O 01349	5305-840-5938	SCREW, DRIVE: NAMEPLATE, AUTOMATIC FEED AND RHEOSTAT INSTRUCTION PLATE MTG (96906) MS21318-19		EA		3	SEE GRP 2210									
F 01350	5305-012-0628	SCREW, MACHINE: BATTERY RESISTOR MTG, 1/4-20 THD SIZE, 1/2 IN. LG	A	EA		2	SEE GRP 2211									
F 01351	5305-984-6191	SCREW, MACHINE: CABLE CLAMP SHUNT (96906) MS35206-243	B	EA		2	•	•	•	•	•	•	•	•	45	43
F 01352	5305-984-4982	SCREW, MACHINE: CABLE CLAMP WASHER (96906) MS35206-225	B	EA		2	SEE GRP 2208									
O 01353	5305-984-6212	SCREW, MACHINE: CAPACITOR MTG (96906) MS35206-265	B	EA		2	SEE GRP 2214									
F 01354	5305-984-6195	SCREW, MACHINE: CONNECTOR COVER MTG (96906) MS35206-247	A	EA		3	•	•	•	•	•	•	•	•	36	30
F 01355	5305-984-6193	SCREW, MACHINE: CONNECTOR MTG (96906) MS35206-245		EA		3	SEE GRP 2208									
F 01356	5305-984-6193	SCREW, MACHINE: CONNECTOR MTG (96906) MS35206-245		EA		3	SEE GRP 2208									
F 01357	5305-984-6193	SCREW, MACHINE: COVER ASSY AND RECEPTACLE MTG (96906) MS35206-245		EA		9	•	•	•	•	•	•	•	•		

(1) SMR CODE / INDEX NO.	(2) FEDERAL STOCK NUMBER	(3) DESCRIPTION REFERENCE NO. & MFR. CODE — USABLE ON CODE	(4) UNIT OF ISSUE	(5) QTY INC IN UNIT PACK	(6) QTY INC IN UNIT	(7) 30-DAY DS MAINT ALLOWANCE (a) 1-20	(b) 21-50	(c) 51-100	(8) 30-DAY GS MAINT ALLOWANCE (a) 1-20	(b) 21-50	(c) 51-100	(9) 1-YR ALW PER 100 EQUIP CNTGCY	(10) DEPOT MAINT ALW-PER 100 EQUIP	(11) ILLUSTRATION (a) FIG NO.	(b) ITEM NO.
0 01372	5305-879-3825	SCREW, TAPPING, THREAD FORMING: GROUNDING PLATE MTG (96906) MS24637-1 B	EA		2	SEE	GRP	2210							
F 01373	5305-068-0545	SCREW, TAPPING, THREAD FORMING: REVERSE CURRENT RESET SWITCH MTG (96906) MS24617-15 A	EA		2	*	*	*	*	*	*	*	*	35	21
F 01374	5305-052-6920	SCREW, TAPPING, THREAD CUTTING: ROTARY SWITCH MTG (96906) MS24629-56 B	EA		4	SEE	GRP	4310							
F 01375	5305-013-1259	SCREW, TAPPING, THREAD FORMING: ROTARY SWITCH MTG A	EA		4	SEE	GRP	4311							
F 01376	5305-016-9554	SCREW, TAPPING, THREAD FORMING: SWITCH MTG (00000) 16955A B	EA		2	SEE	GRP	4310							
F 01377	5305-879-3825	SCREW, TAPPING, THREAD FORMING: TIME METER MTG (96906) MS24637-1 B	EA		3	SEE	GRP	4703							
F 01378		SCREW, TAPPING, THREAD CUTTING: TIME TOTALIZING METER MTG (96906) MS24637-2 A	EA		3	SEE	GRP	4703							
F 01379	5305-957-2358	SCREW, TAPPING, THREAD FORMING: TOGGLE SWITCH MTG (96906) MS24621-54 B	EA		6	SEE	GRP	4310							
F 01380	5305-052-6920	SCREW, TAPPING, THREAD CUTTING: VARIABLE RESISTOR MTG (96906) MS24629-56 B	EA		2	SEE	GRP	4311							
F 01381		SETSCREW: RHEOSTAT ADAPTER (96906) MS51021-58	EA		1	SEE	GRP	4311							
X2F 01382		SHIELD ASSEMBLY, HEAT (28835) 8AM840	EA		1										
X2F 01383		INSULATION, HEAT SHIELD (28835) 8AM839	EA		1									36	9
X2F 01384		RIVET, TUBULAR: BRASS, 5/16 IN. LG (28835) R3331	EA		4									36	10
X1 01385		SHIELD, HEAT (28835) 8AM838	EA		1									36	8

(1) SMR CODE / INDEX NO.	(2) FEDERAL STOCK NUMBER	(3) DESCRIPTION — REFERENCE NO. & MFR. CODE	USABLE ON CODE	(4) UNIT OF ISSUE	(5) QTY INC IN UNIT PACK	(6) QTY INC IN UNIT	(7) 30-DAY DS MAINT ALLOWANCE (a) 1-20	(b) 21-50	(c) 51-100	(8) 30-DAY GS MAINT ALLOWANCE (a) 1-20	(b) 21-50	(c) 51-100	(9) 1-YR ALW PER 100 EQUIP CNTGCY	(10) DEPOT MAINT ALW-PER 100 EQUIP	(11) ILLUSTRATION (a) FIG NO.	(b) ITEM NO
F 01401	5310-571-5506	WASHER, FLAT: LOOP CLAMP MTG (96906) MS15795-306	B	EA		6	•	•	•	•	•	•	•	•	45	2
O 01402	5310-722-5998	WASHER, FLAT: LOOP CLAMP MTG (96906) MS15795-805	B	EA		4	•	•	•	•	•	•	•	•	45	14
O 01403	5310-582-5677	WASHER, FLAT: PANEL GROUNDING (96906) MS15795-310	B	EA		2	•	•	•	•	•	•	•	•	45	20
F 01404	5310-209-1491	WASHER, FLAT: TERMINAL STRIP MTG (96906) MS15795-606	A	EA		2	SEE GRP 4408									
F 01405	5310-571-5506	WASHER, FLAT: TERMINAL STRIP MTG (96906) MS15795-306	B	EA		2	SEE GRP 4408									
F 01406	5310-045-5214	WASHER, FLAT: TERMINAL STUD (96906) MS15795-914	A	EA		20	SEE GRP 4408									
O 01407	5310-184-8628	WASHER, FLAT: TERMINAL STUD (96906) MS15795-816	B	EA		15	SEE GRP 4408									
F 01408	5310-010-3319	WASHER, FLOCK: BATTERY RESISTOR MTG (96906) MS35338-6	A	EA		2	SEE GRP 4411									
F 01409	5310-012-0384	WASHER, LOCK: CABLE CLAMP TO ROTARY SWITCH (96906) MS35338-29	B	EA		1	•	•	•	•	•	•	•	•		
F 01410	5310-596-7674	WASHER, LOCK: CABLE CLAMP WASHER (96906) MS35338-22	B	EA		2	•	•	•	•	•	•	•	•		
O 01411	5310-596-7691	WASHER, LOCK: CAPACITOR MTG (96906) MS35335-32		EA		2	SEE GRP 4414									
F 01412	5310-045-3299	WASHER, LOCK: CONNECTOR MTG (96906) MS35338-42	A	EA		3	SEE GRP 4408									
F 01413	5310-950-0889	WASHER, LOCK: CONNECTOR MTG (96906) MS35335-17	A	EA		3	SEE GRP 4408									
F 01414	5310-010-3323	WASHER, LOCK: LEAD TO SHUNT MTG (96906) MS35338-10	A	EA		1	•	•	•	•	•	•	•	•	39	43
O 01415	5310-596-7674	WASHER, LOCK: LOOP CLAMP AND BRACKET MTG (96906) MS35338-22	B	EA		4	•	•	•	•	•	•	•	•	45	13

(1) SMR CODE / INDEX NO.	(2) FEDERAL STOCK NUMBER	(3) DESCRIPTION REFERENCE NO. & MFR. CODE — USABLE ON CODE	(4) UNIT OF ISSUE	(5) QTY INC IN UNIT PACK	(6) QTY INC IN UNIT	(7) 30-DAY DS MAINT ALLOWANCE (a) 1-20	(b) 21-50	(c) 51-100	(8) 30-DAY GS MAINT ALLOWANCE (a) 1-20	(b) 21-50	(c) 51-100	(9) 1-YR ALW PER 100 EQUIP CNTGCY	(10) DEPOT MAINT ALW-PER 100 EQUIP	(11) ILLUS-TRATION (a) FIG NO.	(b) ITEM NO.
F 01431	5310-010-6495	WASHER, LOCK: VOLTMETER MTG (96906) MS35338-3 — A	EA		6	•	•	•	•	•	•	•	•	36	23
P F 01432	5330-202-1386	WASHER, NONMETALLIC: TERMINAL STUD (28835) A25	EA		16	SEE GRP 4408									
F 01433	5305-269-3206	SCREW, CAP, HEXAGON HEAD: WIRE CONNECTOR TO SWITCH (96906) MS90725-57	EA		1	•	•	•	•	•	•	•	•	35	11
F 01434	5305-269-3206	SCREW, CAP, HEXAGON HEAD: WIRE CONNECTORS SWITCH (96906) MS90725-55	EA		7	•	•	•	•	•	•	•	•	35	34
XF 01435		TERMINAL, RING TONGUE: PANEL BOARD REAR WIRING (70903) 7523	EA		4										
XF 01436		TERMINAL, RING TONGUE: PANEL BOARD REAR WIRING (79061) 6304	EA		20										
XF 01437		TERMINAL, SPADE TONGUE: PANEL BOARD REAR WIRING (79061) 6602	EA		26										
XF 01438	5940-204-7818	TERMINAL, SPADE TONGUE: PANEL BOARD REAR WIRING, BRASS (59730) B6AG	EA		12										
XF 01439		TERMINAL, SPADE TONGUE: REAR PANEL BOARD WIRING (79061) 6700	EA		37										
F 01440	5310-637-9581	WASHER, LOCK: WIRE CONNECTORS TO 10 WAY SWITCH MTG (96906) MS35338-46	EA		8	•	•	•	•	•	•	•	•	35	10
M F 01441		WIRE, ELECTRICAL: REAR PANEL BOARD WIRING MANUFACTURE FROM:	EA		1										
P F 01442	6145-164-7033	WIRE, ELECTRICAL (22 FT REQUIRED)	FT			SEE GRP 9501									
M F 01443		WIRE ELECTRICAL: REAR PANEL BOARD WIRING MANUFACTURE FROM:	EA		1										
P F 01444	6145-164-7026	WIRE, ELECTRICAL (90 FT REQUIRED)	FT			SEE GRP 9501									

(1) SMR CODE — INDEX NO.	(2) FEDERAL STOCK NUMBER	(3) DESCRIPTION — REFERENCE NO. & MFR. CODE	USABLE ON CODE	(4) UNIT OF ISSUE	(5) QTY INC IN UNIT PACK	(6) QTY INC IN UNIT	(7) 30-DAY DS MAINT ALLOWANCE (a) 1-20	(b) 21-50	(c) 51-100	(8) 30-DAY GS MAINT ALLOWANCE (a) 1-20	(b) 21-50	(c) 51-100	(9) 1-YR ALW PER 100 EQUIP CNTGCY	(10) DEPOT MAINT ALW-PER 100 EQUIP	(11) ILLUSTRATION (a) FIG NO.	(b) ITEM NO
X2F 01299		BRACKET, RELAY (28835) 8W1283		EA		1										
P O 01300	5910-561-8847	CAPACITOR, FIXED, PAPER DIELECTRIC: CONTROL PANEL (28835) CA504		EA		6	SEE GRP 4414									
P O 01301	5910-669-3913	CAPACITOR, FIXED, PAPER DIELECTRIC: CONTROL PANEL (28835) CA484		EA		2	SEE GRP 4414									
P O 03102	5910-504-7814	CAPACITOR, FIXED, PAPER DIELECTRIC: PANEL (28835) CA481		EA		2	SEE GRP 4414									
X2F 01303	5975-447-4285	CLAMP, ELECTRICAL (28835) SCW989		EA		2	SEE GRP 4408									
X20 01304	5340-680-4402	CLAMP, LOOP: CAPACITOR BRACKET AND RESISTOR SWITCH (81074) EC6	B	EA		2									45	1
X20 03105		CLAMP, LOOP: RECEPTACLE WIRING (81074) EC8	B	EA		2									45	15
X20 01306	5340-285-7731	CLAMP, LOOP: WIRING (81074) EC10	B	EA		2									45	6
X2F 01307	5977-429-0960	COLLAR, RIVET PIN: RHEOSTAT MTG SCREW (28835) C86	A	EA		2	SEE GRP 4411									
X1 01308	5930-395-4619	CONNECTOR, ELECTRICAL: RESET BUTTON (28835) 5045130	B	EA		2										
P F 01309	5935-865-5267	CONNECTOR, RECEPTACLE, ELECTRICAL: 110v (71183) 5262	A	EA		3	SEE GRP 4408									
X2F 01310	5935-258-4663	CONNECTOR, RECEPTACLE, ELECTRICAL: 110v (28835) RW3399	B	EA		3									36	50
P F 01311	5935-027-9425	CONNECTOR, RECEPTACLE, ELECTRICAL: CONTROL PANEL (79545) 7582		EA		3	SEE GRP 4408									
X2F 01312		COVER, SAFETY: TWIST LOCK CONNECTOR (28835) 8W1448		EA		1									36	31
P O 01313	5920-280-5002	FUSE, CARTRIDGE: 10 AMP (75915) 314010	B	EA		3	SEE GRP 4409									

(1) SMR CODE / INDEX NO.	(2) FEDERAL STOCK NUMBER	(3) DESCRIPTION — REFERENCE NO. & MFR. CODE	USABLE ON CODE	(4) UNIT OF ISSUE	(5) QTY INC IN UNIT PACK	(6) QTY INC IN UNIT	(7) 30-DAY DS MAINT ALLOWANCE (a) 1-20	(b) 21-50	(c) 51-100	(8) 30-DAY GS MAINT ALLOWANCE (a) 1-20	(b) 21-50	(c) 51-100	(9) 1-YR ALW PER 100 EQUIP CNTGCY	(10) DEPOT MAINT ALW-PER-100 EQUIP	(11) ILLUSTRATION (a) FIG NO.	(b) ITEM NO.
F 01329	5310-012-0622	NUT, PLAIN, HEXAGON: RECEPTACLE MTG (96906) MS35649-82	B	EA		6	SEE	DRP	2308							
F 01330	5310-281-1329	NUT, PLAIN, HEXAGON: TERMINAL STRIP MTG (19207) 7535477	A	EA		2	SEE	DRP	2308							
F 01331	5310-013-4530	NUT, PLAIN, HEXAGON: TERMINAL STRIP MTG (96906) MS35649-62	B	EA		2	SEE	DRP	2308							
F 01332	5310-045-1817	NUT, PLAIN, HEXAGON: TERMINAL STUD (24617) 451817	A	EA		30	SEE	DRP	2308							
O 01333	5310-732-0558	NUT, PLAIN, HEXAGON: TERMINAL STUD (96906) MS51967-8	B	EA		10	SEE	DRP	2308							
F 01334	5310-275-1706	NUT, PLAIN, HEXAGON: VOLTMETER MTG (96906) MS35649-61	A	EA		6	•	•	•	•	•	•	•	•	35	22
O 01335		NUT, PLAIN, WING: PANEL GROUNDING (96906) MS35425-13	B	EA		1	•	•	•	•	•	•	•	•	45	22
F 01336		NUT, PLAIN, WING: TERMINAL STUD (96906) MS35425-4	A	EA		8	SEE	DRP	2308							
O 01337		NUT, PLAIN, WING: TERMINAL STUD (96906) MS35425-36	B	EA		5	SEE	DRP	2308							
X2F 01338		PANEL: CONTROL (28835) 8W1281	A	EA		1									35	12
X2F 01339		PANEL: CONTROL (28835) 8W1575	B	EA		1									45	34
X20 01340		PLATE, GROUNDING: CONTROL PANEL (16004) 33972	B	EA		1	SEE	DRP	2310							
X20 01341	6115-025-3099	PLATE, INSTRUCTION: RHEOSTAT (28835) A891	B	EA		1	SEE	DRP	2310							
X2F 01342	5945-651-8640	RELAY, ARMATURE (74063) G100		EA		1	SEE	DRP	2310							
P F 01343	5905-845-9272	RESISTOR, VARIABLE: BATTERY CHARGING SELECTOR AND WELDER HIGH AND LOW VOLTAGE (28835) 8W162		EA		2	SEE	DRP	2311							

(1) SMR CODE / INDEX NO.	(2) FEDERAL STOCK NUMBER	(3) DESCRIPTION / REFERENCE NO. & MFR. CODE	USABLE ON CODE	(4) UNIT OF ISSUE	(5) QTY INC IN UNIT PACK	(6) QTY INC IN UNIT	(7) 30-DAY DS MAINT ALLOWANCE (a) 1-20	(b) 21-50	(c) 51-100	(8) 30-DAY GS MAINT ALLOWANCE (a) 1-20	(b) 21-50	(c) 51-100	(9) 1-YR ALW PER 100 EQUIP ENTGCY	(10) DEPOT MAINT ALW-PER 100 EQUIP	(11) ILLUSTRATION (a) FIG NO.	(b) ITEM NO
0 01358	5305-286-1929	SCREW, MACHINE: LOOP CLAMP MTG (00000) 453159	B	EA		5	•	•	•	•	•	•	•	•	45	9
F 01359	5305-985-1724	SCREW, MACHINE: RELAY BRACKET MTG (96906) MS35206-280	B	EA		2	SEE GRP 4310									
F 01360	5305-637-1126	SCREW, MACHINE: ROTARY SWITCH MTG (96906) MS35214-67	A	EA		4	SEE GRP 4310									
F 01361	5305-068-0901	SCREW, MACHINE: ROTARY SWITCH MTG (96906) MS90725-5	B	EA		4	SEE GRP 4310									
F 01362	5305-984-4992	SCREW, MACHINE: TERMINAL STRIP MTG (96906) MS35206-232	A	EA		2	SEE GRP 4308									
F 01363	5305-290-2562	SCREW, MACHINE: TERMINAL STRIP MTG, NO. 6-32 THD SIZE, 3/8 IN. LG	B	EA		2	SEE GRP 4308									
F 01364	5305-988-1732	SCREW, MACHINE: VARIABLE RESISTOR MTG (96906) MS35206-291	B	EA		2	SEE GRP 4311									
F 01365	5305-984-4992	SCREW, MACHINE: VOLTMETER MTG (96906) MS35206-232	A	EA		3	•	•	•	•	•	•	•	•	36	21
F 01366	5305-879-7942	SCREW, TAPPING, THREAD FORMING: AC, DC, VOLTMETER AND FREQUENCY METER (96906) MS24617-3		EA		12	•	•	•	•	•	•	•	•	35	17
F 01367	5305-052-6920	SCREW, TAPPING, THREAD CUTTING: BRACKET TO CONTROL PANEL MTG (96906) MS24629-56	A	EA		3	SEE GRP 4310									
F 01368	5305-858-9351	SCREW, TAPPING, THREAD CUTTING: BUTTON ASSY MTG (96906) MS24630-23	B	EA		2	•	•	•	•	•	•	•	•	45	38
0 01369	5305-958-3050	SCREW, TAPPING, THREAD FORMING: CONTACT MTG (96906) MS24649-24	B	EA		4	•	•	•	•	•	•	•	•		
F 01370	5305-828-9821	SCREW, TAPPING, THREAD FORMING: ENGINE START SWITCH AND 3 POSITION SWITCH MTG (96906) MS24629-13	A	EA		6	SEE GRP 4310									
F 01371	5305-879-3825	SCREW, TAPPING, THREAD FORMING: FREQUENCY METER, VOLTMETER AND AMMETER MTG (96906) MS24637-1	B	EA		9	•	•	•	•	•	•	•	•	37	17

SMR CODE / INDEX NO.	(2) FEDERAL STOCK NUMBER	(3) DESCRIPTION — REFERENCE NO. & MFR CODE — USABLE ON CODE	(4) UNIT OF ISSUE	(5) QTY INC IN UNIT PACK	(6) QTY INC IN UNIT	(7) 30-DAY DS MAINT ALLOWANCE (a) 1-20	(b) 21-50	(c) 51-100	(8) 30-DAY GS MAINT ALLOWANCE (a) 1-20	(b) 21-50	(c) 51-100	(9) 1-YR ALW PER 100 EQUIP ENTGCY	(10) DEPOT MAINT ALW-PER 100 EQUIP	(11) ILLUSTRATION (a) FIG NO.	(b) ITEM NO.
F 01386	5310-080-4862	WASHER, FLAT: INSULATION MTG (28835) 8130	EA		4	•	•	•	•	•	•	•	•	36	7
XZF 01387	6625-272-9889	SHUNT, INSTRUMENT (28835) CW1142A	EA		1									36	49
XZF 01388	5340-429-0969	SPACER, RHEOSTAT TO HOUSING: RHEOSTAT MTG (28835) CW1347	EA		4	SEE GMP 4011									
XZF 01389		STATION, RESET (28835) 8BW771	EA		1									35	24
XZF 01390		STUD, TERMINAL (28835) 6875A-7	EA		8	SEE GMP 4008									
P F 01391	3431-685-8956	SWITCH ASSEMBLY: RESISTOR (28835) 8BW816	EA		1	SEE GMP 4010									
P F 01392	5930-740-0011	SWITCH, ROTARY: 10 RANGE, WELDING VOLTAGE CONTROL (28835) AM25-1	EA		1	SEE GMP 4010									
P F 01393	5930-751-8974	SWITCH, ROTARY: POLARITY CONTROL A (28835) 8BW753	EA		1	SEE GMP 4010									
XZF 01394	5930-272-1382	SWITCH, TOGGLE: 3 POSITION A (04009) 80634	EA		3	SEE GMP 4010									
P F 01395	5930-263-2369	SWITCH, TOGGLE: OFF-ON (04009) 100006	EA		1	SEE GMP 4010									
XZF 01396		TERMINAL BOARD (28835) 5CW2079	EA		1	SEE GMP 4008									
XZF 01397	6625-842-0898	VOLTMETER (28835) W8703-12	EA		1									36	18
P F 01398	6680-845-0606	VOLTMETER: 0-150, 0-300, AC (28835) 8BW1293	EA		1	•	•	2	•	•	2	6	5	36	20
XZF 01399	5310-543-2862	WASHER, FLAT: CABLE CLAMP TO ROTARY SWITCH B (96906) MS15795-818	EA		1									35	33
0 01400	5310-849-7733	WASHER, FLAT: LOOP CLAMP BRACKET MTG B (96906) MS15795-311	EA		2	•	•	•	•	•	•	•	•	45	8

SMR CODE / INDEX NO.	(2) FEDERAL STOCK NUMBER	(3) DESCRIPTION — REFERENCE NO. & MFR CODE	USABLE ON CODE	(4) UNIT OF ISSUE	(5) QTY INC IN UNIT PACK	(6) QTY INC IN UNIT	(7) 30-DAY DS MAINT ALLOWANCE (a) 1-20	(b) 21-50	(c) 51-100	(8) 30-DAY GS MAINT ALLOWANCE (a) 1-20	(b) 21-50	(c) 51-100	(9) 1-YR ALW PER MR EQUIP CNTGCY	(10) DEPOT MAINT ALW-PER 100 EQUIP	(11) ILLUSTRATION (a) FIG NO.	(b) ITEM NO.
0 01416	5310-209-5309	WASHER, LOCK: LOOP CLAMP BRACKET MTG, CABLE CLAMP SHUNT (96906) MS35338-23	B	EA		5	•	•	•	•	•	•	•	•	45	17
0 01417	5310-012-0214	WASHER, LOCK: LOOP CLAMP MTG (96906) MS35338-26	B	EA		1	•	•	•	•	•	•	•	•	45	3
0 01418	5310-186-7454	WASHER, LOCK: LOOP CLAMP MTG (96906) MS35338-41	B	EA		2	•	•	•	•	•	•	•	•	45	5
0 01419	5310-527-3289	WASHER, LOCK: PANEL GROUNDING (96906) MS35333-23	B	EA		4	•	•	•	•	•	•	•	•	45	19
F 01420		WASHER, LOCK: RECEPTACLE MTG (96906) MS45904-58	B	EA		6	SEE GRP 4408									
F 01421	5310-543-2705	WASHER, LOCK: RELAY BRACKET MTG (96906) MS35338-37	B	EA		2	SEE GRP 4410									
F 01422	5310-543-2705	WASHER, LOCK: RESISTOR SWITCH ASSY MTG (96906) MS35338-37	B	EA		3	SEE GRP 4410									
F 01423	5310-012-0380	WASHER, LOCK: ROTARY SWITCH MTG (96906) MS35338-25	B	EA		4	SEE GRP 4410									
F 01424	5310-527-3289	WASHER, LOCK: ROTARY SWITCH MTG (96906) MS35333-23	B	EA		4	SEE GRP 4410									
F 01425	5310-543-2705	WASHER, LOCK: ROTARY SWITCH MTG (96906) MS35338-37	B	EA		4	SEE GRP 4410									
F 01426	5310-010-6495	WASHER, LOCK: TERMINAL STRIP MTG (96906) MS35338-3	A	EA		2	SEE GRP 4408									
F 01427	5310-596-7674	WASHER, LOCK: TERMINAL STRIP MTG (96906) MS35338-22	B	EA		2	SEE GRP 4408									
F 01428	5310-543-2705	WASHER, LOCK: TERMINAL STUD (96906) MS35338-27	A	EA		20	SEE GRP 4408									
0 01429	5310-637-9541	WASHER, LOCK: TERMINAL STUD (96906) MS35338-46	B	EA		15	SEE GRP 4408									
F 01430	5310-527-3289	WASHER, LOCK: VARIABLE RESISTOR MTG (96906) MS35333-23	B	EA		2	SEE GRP 4411									

(1) Basic CODE / INDEX NO.	(2) FEDERAL STOCK NUMBER	(3) DESCRIPTION REFERENCE NO. & MFR. CODE — USABLE ON CODE	(4) UNIT OF ISSUE	(5) QTY INC IN UNIT PACK	(6) QTY INC IN UNIT	(7) 30-DAY OS MAINT ALLOWANCE (a) 1-20	(b) 21-50	(c) 51-100	(8) 30-DAY GS MAINT ALLOWANCE (a) 1-20	(b) 21-50	(c) 51-100	(9) 1-YR ALW PER 100 EQUIP CATGY	(10) DEPOT MAINT ALW-PER 100 EQUIP	(11) ILLUSTRATION (a) FIG NO.	(b) ITEM NO.
M F 01845		WIRE, ELECTRICAL: REAR PANEL BOARD WIRING	EA		1										
		MANUFACTURE FROM:													
P F 01846	6145-192-3318	WIRE, ELECTRICAL (8 FT REQUIRED)	FT			SEE MAP 5501									
01847		5905 - CONNECTING DEVICES													
XBF 01848		BLOCK ASSEMBLY, TERMINAL (28835) 504000	EA		1										
XBF 01849		BLOCK, TERMINAL (28835) 504003	EA		1									26	9
F 01850	5310-176-8137	NUT, PLAIN, HEXAGON: TERMINAL LEAD SCREW 10-32 THD SIZE (88044) AN340-10	EA		8	•	•	•	•	•	•	•	•	26	11
F 01851	5310-619-3555	NUT, PLAIN, HEXAGON: TERMINAL LEAD SCREW 1/4-20 THD SIZE	EA		12	•	•	•	•	•	•	•	•	26	12
F 01852	5305-958-3048	SCREW, MACHINE: TERMINAL LEAD 1/4-20 THD SIZE, 1-1/4 IN. LG (96906) MS35273-88	EA		6									26	17
F 01853	5310-550-1130	WASHER, LOCK: TERMINAL LEAD (96906) MS35333-40	EA		6	•	•	•	•	•	•	•	•	26	16
F 01854	5305-068-5823	SCREW, MACHINE: TERMINAL LEAD SCREW (96906) MS35273-67	EA		4	•	•	•	•	•	•	•	•	26	7
F 01855	5310-576-5752	WASHER, LOCK: TERMINAL LEAD SCREW (96906) MS35333-39	EA		8	•	•	•	•	•	•	•	•	26	8
F 01856	5310-809-8936	WASHER, FLAT: TERMINAL LEAD SCREW (96906) MS27183-8	EA		8	•	•	•	•	•	•	•	•	26	10
F 01857	5310-809-3078	WASHER, FLAT: TERMINAL LEAD SCREW (96906) MS27183-11	EA		12	•	•	•	•	•	•	•	•	26	14
F 01858	5310-010-3319	WASHER, LOCK: TERMINAL LEAD SCREW (96906) MS35338-6	EA		12	•	•	•	•	•	•	•	•	26	13

(1) SMR CODE / INDEX NO.	(2) FEDERAL STOCK NUMBER	(3) DESCRIPTION — REFERENCE NO. & MFR. CODE — USABLE ON CODE	(4) UNIT OF ISSUE	(5) QTY INC IN UNIT PACK	(6) QTY INC IN UNIT	(7) 30-DAY DS MAINT ALLOWANCE (a) 1-20	(b) 21-50	(c) 51-100	(8) 30-DAY GS MAINT ALLOWANCE (a) 1-20	(b) 21-50	(c) 51-100	(9) 1-YR ALLOW PER 100 EQUIP CNTGCY	(10) DEPOT MAINT ALLOW PER 100 EQUIP	(11) ILLUSTRATION (a) FIG NO.	(b) ITEM NO
XZF 01459	3431-830-5382	BLOCK ASSEMBLY, TERMINAL (28035) DWA016 (SAME AS BLOCK ASSEMBLY, TERMINAL, STOCK NO. 4940-798-7558, EXCEPT WHERE INDIVIDUAL COMPONENTS ARE ANNOTATED)	EA		1										
XZF 01460	4940-798-7558	BLOCK ASSEMBLY, TERMINAL (28035) DWA015	EA		1										
XZF 01461		BLOCK (28035) DWA008 (USED WITH BLOCK ASSEMBLY, TERMINAL, STOCK NO. 4940-798-7558 ONLY)	EA		1									25	2
XZF 01462		BLOCK (28035) DWA005 (USED WITH BLOCK ASSEMBLY, TERMINAL, STOCK NO. 3431-830-5382 ONLY)	EA		1									25	1
F 01463	5306-225-8498	BOLT, MACHINE: TERMINAL PLATE CLAMP (96906) MS90725-29	EA		10	•	•	•	•	•	•	•	•	25	8
XZF 01464		LUG ASSEMBLY (28035) DWA028	EA		10									25	6
F 01465	5310-012-0361	NUT, PLAIN, HEXAGON: TERMINAL BOARD WIRE MTG (00000) 120361	EA		4	•	•	•	•	•	•	•	•	25	4
XZF 01466		PLATE: TERMINAL CLAMP (28035) DWA953	EA		10									25	5
F 01467	5305-475-5233	SCREW, ASSEMBLED WASHER: OUTPUT TERMINAL TO TERMINAL BOARD (28035) 8M624	EA		10	•	•	•	•	•	•	•	•	25	12
F 01468	5305-989-6218	SCREW, MACHINE: TERMINAL BLOCK AND WIRE MTG No. 8-32 THD SIZE, 1 IN. LG (96906) MS35206-267	EA		8	•	•	•	•	•	•	•	•	25	10
F 01469	5305-724-6810	SETSCREW: CLAMP PLATE (96906) MS519-63-101	EA		10	•	•	•	•	•	•	•	•	25	7
F 01470	5310-809-8946	WASHER, FLAT: TERMINAL BOARD WIRE MTG (96906) MS27183-8	EA		6	•	•	•	•	•	•	•	•	25	10

(1) SMR CODE / INDEX NO.	(2) FEDERAL STOCK NUMBER	(3) DESCRIPTION — REFERENCE NO. & MFR. CODE	USABLE ON CODE	(4) UNIT OF ISSUE	(5) QTY INC IN UNIT PACK	(6) QTY INC IN UNIT	(7) 30-DAY DS MAINT ALLOWANCE (a) 1-20	(b) 21-50	(c) 51-100	(8) 30-DAY GS MAINT ALLOWANCE (a) 1-20	(b) 21-50	(c) 51-100	(9) 1-YR ALW PER 100 EQUIP CONTGCY	(10) DEPOT MAINT ALW-PER 100 EQUIP	(11) ILLUSTRATION (a) FIG NO.	(b) ITEM NO.
F 01486	5310-809-8533	WASHER, FLAT: CABLE CONNECTOR (96906) MS27183-23	A	EA		2	•	•	•	•	•	•	•	•	36	50
F 01487	5310-213-1215	WASHER, FLAT: CABLE CONNECTOR (28835) AW368	A	EA		2	•	•	•	•	•	•	•	•	36	51
F 01488	5310-012-0384	WASHER, LOCK: CABLE CLAMP (96906) MS35338-29		EA		2	•	•	•	•	•	•	•	•	36	52
F 01489	5310-081-2377	WASHER, LOCK: CABLE CLAMP SCREW (28835) DW1862	A	EA		2	•	•	•	•	•	•	•	•		
F 01490	5310-596-7674	WASHER, LOCK: CABLE CLAMP WASHER (96906) MS35338-22	B	EA		2	•	•	•	•	•	•	•	•		
X2F 01491		WASHER, NONMETALLIC: CABLE CLAMP BAKELITE, 21/32 IN. ID, 1-5/8 IN. OD 1/8 IN. THK (28835) 504976A	B	EA		4									36	50
P F 01492	5935-865-5267	CONNECTOR, RECEPTACLE, ELECTRICAL: 110v (71183) 5262	A	EA		3	•	•	2	•	•	2	9	18	36	58
P F 01493	5935-027-9425	CONNECTOR, RECEPTACLE, ELECTRICAL: CONTROL PANEL (79963) 7582		EA		3	•	•	2	•	•	2	9	18	36	24
X20 01494		GUARD ASSEMBLY: TERMINAL BLOCK (28835) 88W1517	B	EA		1										
X20 01495		BRACKET: BOTTOM (28835) 88W1518	B	EA		1									45	25
X20 01496		BRACKET: TOP (28835) 88W1518	B	EA		1									45	26
X20 01497		GUARD (28835) 88W1519	B	EA		1									45	26
O 01498	5305-156-2937	SCREW, MACHINE: BRACKET TO GUARD AND GUARD ASSY MTG (96906) MS35190-249	B	EA		6	•	•	•	•	•	•	•	•	45	27
P F 01499	5970-669-9618	INSULATOR, BRUSH HOLDER STUD: TERMINAL STUD (28835) AM626		EA		8	•	2	2	•	2	2	16	40	36	35
F 01500	5310-012-0622	NUT, PLAIN, HEXAGON: CONNECTOR MTG (96906) MS35649-82	A	EA		3	•	•	•	•	•	•	•	•	36	56

(1) SMR CODE / INDEX NO.	(2) FEDERAL STOCK NUMBER	(3) DESCRIPTION — REFERENCE NO. & MFR. CODE	USABLE ON CODE	(4) UNIT OF ISSUE	(5) QTY INC IN UNIT PACK	(6) QTY INC IN UNIT	(7) 30-DAY DS MAINT ALLOWANCE (a) 1-20	(b) 21-50	(c) 51-100	(8) 30-DAY GS MAINT ALLOWANCE (a) 1-20	(b) 21-50	(c) 51-100	(9) 1-YR ALW PER 100 EQUIP ON TOCY	(10) DEPOT MAINT ALW-PER 100 EQUIP	(11) ILLUSTRATION (a) FIG NO.	(b) ITEM NO
F 01516	5310-809-8546	WASHER, FLAT: TERMINAL BOARD MTG (96906) MS27183-8	A	EA		2	•	•	•	•	•	•	•	•	25	10
F 01517	5310-209-1491	WASHER, FLAT: TERMINAL STRIP MTG (96906) MS15795-606	A	EA		2	•	•	•	•	•	•	•	•	35	15
F 01518	5310-577-5506	WASHER, FLAT: TERMINAL STRIP MTG (96906) MS15795-306	B	EA		2	•	•	•	•	•	•	•	•	45	2
F 01519	5310-045-5214	WASHER, FLAT: TERMINAL STUD (96906) MS15795-914	A	EA		20	•	•	•	•	•	•	•	•	36	37
O 01520	5310-184-8628	WASHER, FLAT: TERMINAL STUD (96906) MS15795-816	B	EA		15	•	•	•	•	•	•	•	•	36	37
F 01521	5310-045-3299	WASHER, LOCK: CONNECTOR MTG (96906) MS35338-42	A	EA		3	•	•	•	•	•	•	•	•	36	57
F 01522	5310-550-0285	WASHER, LOCK: CONNECTOR MTG (96906) MS35335-17	A	EA		3	•	•	•	•	•	•	•	•		
F 01523		WASHER, LOCK: RECEPTACLE MTG (96906) MS35904-58	B	EA		6	•	•	•	•	•	•	•	•		
F 01524	5310-011-5545	WASHER, LOCK: TERMINAL BOARD MTG (96906) MS35333-22	B	EA		2	•	•	•	•	•	•	•	•	26	15
F 01525	5310-010-6495	WASHER, LOCK: TERMINAL STRIP MTG (96906) MS35338-3	A	EA		2	•	•	•	•	•	•	•	•	35	14
F 01526	5310-596-7674	WASHER, LOCK: TERMINAL STRIP MTG (96906) MS35338-22	B	EA		2	•	•	•	•	•	•	•	•	45	13
F 01527	5310-543-2705	WASHER, LOCK: TERMINAL STUD (96906) MS35338-27	A	EA		20	•	•	•	•	•	•	•	•	36	35
O 01528	5310-637-9541	WASHER, LOCK: TERMINAL STUD (96906) MS35338-46	B	EA		15	•	•	•	•	•	•	•	•	36	35
P F 01529	5330-202-1386	WASHER, NONMETALLIC: TERMINAL STUD (28835) A25		EA		16	3	7	13	3	7	13	160	320	36	60

(1) SMR CODE / INDEX NO.	(2) FEDERAL STOCK NUMBER	(3) DESCRIPTION — REFERENCE NO. & MFR. CODE — USABLE ON CODE	(4) UNIT OF ISSUE	(5) QTY INC IN UNIT PACK	(6) QTY INC IN UNIT	(7) 30-DAY DS MAINT ALLOWANCE (a) 1-20	(b) 21-50	(c) 51-100	(8) 30-DAY GS MAINT ALLOWANCE (a) 1-20	(b) 21-50	(c) 51-100	(9) 1-YR ALW PER 100 EQUIP ONTGCY	(10) DEPOT MAINT ALW-PER 100 EQUIP	(11) ILLUSTRATION (a) FIG NO.	(b) ITEM NO
F 01545	5305-988-1721	SCREW, MACHINE: RELAY BRACKET MTG (96906) MS35206-277	EA		2	•	•	•	•	•	•	•	•	34	5
F 01546	5305-637-1126	SCREW, MACHINE: ROTARY SWITCH MTG B (96906) MS35214-67	EA		4	•	•	•	•	•	•	•	•	35	27
F 01547	5305-052-6920	SCREW, TAPPING, THREAD CUTTING: BRACKET TO CONTROL PANEL MTG A (96906) MS24629-56	EA		3	•	•	•	•	•	•	•	•	39	54
F 01548	5305-052-6920	SCREW, TAPPING, THREAD CUTTING: ROTARY SWITCH MTG B (96906) MS24629-56	EA		4	•	•	•	•	•	•	•	•	45	40
F 01549	5305-826-9821	SCREW, TAPPING, THREAD FORMING: ENGINE SWITCH TO CONTROL PANEL A (96906) MS24629-13	EA		6	•	•	•	•	•	•	•	•	36	25
F 01550	5305-895-0961	SCREW, TAPPING, THREAD FORMING: RELAY TO BRACKET MTG A (96906) MS24629-35	EA		4	•	•	•	•	•	•	•	•	38	9
F 01551	5305-016-9554	SCREW, TAPPING, THREAD FORMING: SWITCH MTG B (00000) 16955A	EA		2	•	•	•	•	•	•	•	•	45	37
F 01552	5305-957-2258	SCREW, TAPPING, THREAD FORMING: TOGGLE SWITCH MTG B (96906) MS24621-54	EA		6	•	•	•	•	•	•	•	•		
P F 01553	5931-685-8956	SWITCH ASSEMBLY: RESISTOR (28835) 6BM816	EA		1	•	•	2	•	•	2	6	5		
XDF 01554		BAFFLE: ARC, SHIELD (28835) 5048326	EA		1									39	23
F 01555	5306-017-4684	BOLT, MACHINE: BUS BAR AND TRIP ASSY MTG A (96906) MS35309-40	EA		2	•	•	•	•	•	•	•	•	39	1
XDF 01556		BRACKET: SHUTOFF SWITCH AND RESISTOR MTG (28835) 6BM819	EA		1									39	55
XI 01557	6110-325-5147	BRACKET, BEARING SUPPORT, ARMATURE SHAFT (28835) 5048472	EA		1									39	40
XDF 01558	5950-404-9673	BRACKET, COIL (28835) 5048262	EA		2									39	48
XDF 01559		BUS BAR: CENTER (28835) 2948867	EA		1									39	68

(1) SMR CODE / INDEX NO.	(2) FEDERAL STOCK NUMBER	(3) DESCRIPTION — REFERENCE NO. & MFR. CODE — USABLE ON CODE	(4) UNIT OF ISSUE	(5) QTY INC IN UNIT PACK	(6) QTY INC IN UNIT	(7) 30-DAY DS MAINT ALLOWANCE (a) 1-20	(b) 21-50	(c) 51-100	(8) 30-DAY GS MAINT ALLOWANCE (a) 1-20	(b) 21-50	(c) 51-100	(9) 1-YR ALW PER GS EQUIP CNTCT	(10) DEPOT MAINT ALW-PER 100 EQUIP	(11) ILLUSTRATION (a) FIG NO.	(b) ITEM NO
MF 01574		LEAD ASSEMBLY: CONTACT SCREW TO MOTOR GENERATOR SWITCH MANUFACTURE FROM:	EA		1									35	9
XDF 01575	5940-681-9713	TERMINAL, LUG (96906) MS20659-4	EA		2										
PF 01576	6145-669-6781	WIRE, ELECTRICAL (20 IN. REQUIRED)	FT			SEE [illegible] 9501									
MF 01577		LEAD ASSEMBLY: JUMPER COIL TO MOTOR GENERATOR SWITCH MANUFACTURE FROM:	EA		1									35	53
XDF 01578	5940-681-9713	TERMINAL, LUG (96906) MS20659-4	EA		2										
PF 01579	6145-198-3268	WIRE, ELECTRICAL (25 IN. REQUIRED)	FT			SEE [illegible] 9501									
XDF 01580	6115-374-9049	LINK, PANEL: SHORT BUS BAR (28035) 04011	EA		1									39	7
F 01581	5310-768-0319	NUT, PLAIN, HEXAGON: BUS BEARING SUPPORT BRACKET AND PANEL LINK MTG B (96906) MS51968-2	EA		7	•	•	•	•	•	•	•	•	39	18
F 01582	5310-013-0361	NUT, PLAIN, HEXAGON: CONTACT TO ARMATURE SHAFT B (96906) MS35649-102	EA		4	•	•	•	•	•	•	•	•	39	30
F 01583	5310-761-6882	NUT, PLAIN, HEXAGON: CONTACTS, YOKE AND BEARING SUPPORT MTG A (96906) MS51967-2	EA		22	•	•	•	•	•	•	•	•	39	14
F 01584	5310-013-4930	NUT, PLAIN, HEXAGON: ELECTRICAL LEAD MTG A (96906) MS35649-62	EA		4	SEE [illegible] 4411									
F 01585	5310-281-1329	NUT, PLAIN, HEXAGON: ELECTRICAL LEAD TO RESISTOR MTG B (19207) 7335477	EA		4	SEE [illegible] 4411									
F 01586	5310-012-0361	NUT, PLAIN, HEXAGON: SWITCH LEAD, CONTACT TO ARMATURE MTG AND MOVABLE YOKE (96906) MS35649-102	EA		7	•	•	•	•	•	•	•	•	39	10
XI 01587		PANEL, SWITCH (28035) 2948158	EA		1									39	69

(1) SMR CODE / INDEX NO.	(2) FEDERAL STOCK NUMBER	(3) DESCRIPTION — REFERENCE NO. & MFR. CODE — USABLE ON CODE	(4) UNIT OF ISSUE	(5) QTY INC IN UNIT PACK	(6) QTY INC IN UNIT	(7) 30-DAY DS MAINT ALLOWANCE (a) 1-20	(b) 21-50	(c) 51-100	(8) 30-DAY GS MAINT ALLOWANCE (a) 1-20	(b) 21-50	(c) 51-100	(9) 1-YR ALW PER 100 EQUIP ENTGCY	(10) DEPOT MAINT ALW-PER 100 EQUIP	(11) ILLUSTRATION (a) FIG. NO.	(b) ITEM NO.
F 01471	5310-527-3288	WASHER, LOCK: TERMINAL BOARD WIRE NTD (96906) MS35333-22	EA		4	•	•	•	•	•	•	•	•	25	3
F 01472	5310-012-0214	WASHER, LOCK: TERMINAL PLATE CLAMP (96906) MS35338-26	EA		10	•	•	•	•	•	•	•	•	25	9
X20 01473		BLOCK, TERMINAL (28035) 10J225 B	EA		1									45	24
X20 01474		BLOCK, TERMINAL (28035) 8BM1520 B	EA		2									45	23
X2F 01475		BLOCK, TERMINAL: 110/220v, 4kw AND 220v, 7.5kw (28035) 10J226 A	EA		6									36	36
X2F 01476	5975-447-4289	CLAMP, ELECTRICAL: CABLE (28035) 504909	EA		2										
X2F 01477		BUS BAR: CABLE CLAMP (28035) 504974	EA		2									36	46
X2F 01478	5970-698-7191	INSULATOR, PLATE: CABLE CLAMP (28035) 504975	EA		2									36	45
F 01479	5310-010-3131	NUT, PLAIN, WING: CABLE CLAMP (28035) AN750	EA		2	•	•	•	•	•	•	•	•	36	42
F 01480	5305-782-9494	SCREW, CAP, HEXAGON HEAD: CABLE CLAMP (96906) MS90725-119 A	EA		2	•	•	•	•	•	•	•	•	36	54
F 01481	5305-782-9495	SCREW, CAP, HEXAGON HEAD: CABLE CLAMP (96906) MS90725-111	EA		2	•	•	•	•	•	•	•	•	36	44
F 01482	5305-208-6150	SCREW, CAP, HEXAGON HEAD: CABLE CLAMP (96906) MS35297-119 B	EA		2	•	•	•	•	•	•	•	•	36	54
F 01483	5305-984-4962	SCREW, MACHINE: CABLE CLAMP WASHER (96906) MS35206-225	EA		2	•	•	•	•	•	•	•	•	36	53
F 01484	5310-656-0114	WASHER, FLAT: CABLE CLAMP (96906) MS15795-819 B	EA		2	•	•	•	•	•	•	•	•	36	51
F 01485	5310-543-2862	WASHER, FLAT: CABLE CLAMP (96906) MS15795-818	EA		2	•	•	•	•	•	•	•	•	36	48

(1) SMR CODE / INDEX NO.	(2) FEDERAL STOCK NUMBER	(3) DESCRIPTION — REFERENCE NO. & MFR. CODE	USABLE ON CODE	(4) UNIT OF ISSUE	(5) QTY INC IN UNIT PACK	(6) QTY INC IN UNIT	(7) 30-DAY DS MAINT ALLOWANCE (a) 1-20	(b) 21-50	(c) 51-100	(8) 30-DAY GS MAINT ALLOWANCE (a) 1-20	(b) 21-50	(c) 51-100	(9) 1-YR ALW PER 100 EQUIP ON TOCYCY	(10) DEPOT MAINT ALW-PER 100 EQUIP	(11) ILLUSTRATION (a) FIG NO.	(b) ITEM NO.
F 01501	5310-281-1329	NUT, PLAIN, HEXAGON: TERMINAL STRIP MTG (19207) 7535477	A	EA		2	•	•	•	•	•	•	•	•	35	13
F 01502	5310-013-4530	NUT, PLAIN, HEXAGON: TERMINAL STRIP MTG (96906) MS35649-62	P	EA		2	•	•	•	•	•	•	•	•	45	4
F 01503	5310-045-1817	NUT, PLAIN, HEXAGON: TERMINAL STUD (24617) 451817	A	EA		30	•	•	•	•	•	•	•	•	36	39
O 01504	5310-732-0950	NUT, PLAIN, HEXAGON: TERMINAL STUD (96906) MS51967-8	B	EA		10	•	•	•	•	•	•	•	•	36	39
F 01505		NUT, PLAIN, WING: TERMINAL STUD (96906) MS35425-4	A	EA		8	•	•	•	•	•	•	•	•	36	41
O 01506		NUT, PLAIN, WING: TERMINAL STUD (96906) MS35425-26	B	EA		5	•	•	•	•	•	•	•	•	36	41
F 01507	5305-989-6193	SCREW, MACHINE: CONNECTOR MTG (96906) MS35206-245		EA		3	•	•	•	•	•	•	•	•	35	32
F 01508	5305-989-6193	SCREW, MACHINE: CONNECTOR MTG (96906) MS35206-245		EA		3	•	•	•	•	•	•	•	•	36	34
F 01509	5305-989-6214	SCREW, MACHINE: TERMINAL BOARD MTG (96906) MS35206-267	A	EA		2	•	•	•	•	•	•	•	•	26	17
F 01510	5305-989-4992	SCREW, MACHINE: TERMINAL STRIP MTG (96906) MS35206-232	A	EA		2	•	•	•	•	•	•	•	•	35	17
F 01511	5305-290-2562	SCREW, MACHINE: TERMINAL STRIP MTG, NO. 6-32 THD SIZE 3/4 IN. LG	B	EA		2	•	•	•	•	•	•	•	•	45	35
XZF 01512		STRIP, INSULATOR (28035) 046724		EA		2									26	6
XZF 01513		STRIP, INSULATOR (28035) 046724		EA		2									25	41
XZF 01514		STUD, TERMINAL (28035) 40958-7		EA		8									36	40
XZF 01515		TERMINAL BOARD (28035) 504207-9		EA		1									35	16

(1) SMR CODE / INDEX NO.	(2) FEDERAL STOCK NUMBER	(3) DESCRIPTION — REFERENCE NO. & MFR. CODE — USABLE ON CODE	(4) UNIT OF ISSUE	(5) QTY INC IN UNIT PACK	(6) QTY INC IN UNIT	(7) 30-DAY DS MAINT ALLOWANCE (a) 1-20	(b) 21-30	(c) 31-100	(8) 30-DAY GS MAINT ALLOWANCE (a) 1-20	(b) 21-30	(c) 31-100	(9) 1-YR ALW PER MP EQUIP ENTITY	(10) DEPOT MAINT ALW-PER 100 EQUIP	(11) ILLUSTRATION (a) FIG NO.	(b) ITEM NO
01530		4409 - PROTECTIVE DEVICES, ELECTRICAL													
P O 01531	5920-580-5002	FUSE, CARTRIDGE: 10 AMP (75915) 314010 B	EA		3	4	8	15	4	8	15	180	60	45	30
P O 01532	5920-539-6920	FUSE, CARTRIDGE: 30 AMP (75915) 314030 B	EA		3	4	8	15	4	8	15	180	60	45	31
P F 01533	5920-892-9311	FUSEHOLDER (75915) 342001 B	EA		6	•	2	2	•	2	2	12	18	45	29
01534		4410 - SWITCHING, TIMING AND SPEED CONTROL													
XBF 01535		BRACKET, RELAY (28535) 8MW1283	EA		1									35	3
XBF 01536		CONNECTOR, LEAD ASSEMBLY: CUTOUT RELAY (77060) 2340	EA		1									35	6
XBF 05137		INSULATOR: RELAY MTG BRACKET (28535) 8MW747	EA		1									35	2
H F 01538		LEAD ASSEMBLY: CUTOUT RELAY	EA		1									35	7
		MANUFACTURE FROM:													
XBF 01539	5940-050-6209	TERMINAL, LUG (00000) 506209	EA		1										
P F 01540	6145-660-8933	WIRE, ELECTRICAL (9 IN. REQUIRED)	FT			SEE WP 9501									
F 01541	5310-060-2392	NUT, PLAIN, HEXAGON: RELAY TO PANEL (96906) MS35690-831	EA		4	•	•	•	•	•	•	•	•	35	1
XBF 01542	5945-651-8640	RELAY, ARMATURE (74063) G100	EA		1									35	5
F 01543	5305-068-0501	SCREW, CAP, HEXAGON HEAD: RESISTOR SWITCH ASSY MTG (96906) MS90725-5 B	EA		3	•	•	•	•	•	•	•	•		
F 01544	5305-068-0501	SCREW, CAP, HEXAGON HEAD: ROTARY SWITCH ASSY MTG (96906) MS90725-5 B	EA		4	•	•	•	•	•	•	•	•	45	33

(1) SMR CODE / INDEX NO.	(2) FEDERAL STOCK NUMBER	(3) DESCRIPTION — REFERENCE NO. & MFR. CODE — USABLE ON CODE	(4) UNIT OF ISSUE	(5) QTY INC IN UNIT PACK	(6) QTY INC IN UNIT	(7) 30-DAY DS MAINT ALLOWANCE (a) 1-20	(b) 21-50	(c) 51-100	(8) 30-DAY GS MAINT ALLOWANCE (a) 1-20	(b) 21-50	(c) 51-100	(9) 1-YR ALW PER 100 EQUIP OHTOCY	(10) DEPOT MAINT ALW-PER 100 EQUIP	(11) ILLUSTRATION (a) FIG NO.	(b) ITEM NO
XZF 01560		BUS BAR: LEFT HAND, LONG (28035) 5046276	EA		1									39	3
XZF 01561		COIL, RELAY (28035) DATA2215	EA		1									39	50
XZF 01562	5935-860-0504	CONNECTOR, ELECTRICAL: JUMPER (28035) 2548156	EA		2									39	49
XZF 01563	5930-356-7748	CONTACT, ELECTRICAL: MOVABLE (28035) 5046280	EA		3									39	26
XZF 01564	5930-371-5498	CONTACT, ELECTRICAL: STATIONARY (28035) 5046278	EA		3									39	22
XZF 01565	6115-825-8778	HOLDER, CONTACT (28035) AM261	EA		3									39	25
XZF 01566		HOLDER, SHIELD, ARC: LEFT HAND (28035) 5046436	EA		1									39	20
XZF 01567		HOLDER, SHIELD, ARC: RIGHT HAND (28035) 5046435	EA		1									39	17
M F 01568		LEAD ASSEMBLY: CIRCUIT BREAKER ARMATURE TO MOTOR GENERATOR SWITCH MANUFACTURE FROM:	EA		2									39	64
XZF 01569	5940-681-9713	TERMINAL, LUG (96906) MS20659-4	EA		4										
P F 01570	6145-192-3268	WIRE, ELECTRICAL (4 PIECES, 17 IN. LG, 1 PIECE 15 IN. LG, REQUIRED FOR EACH LEAD ASSEMBLY)	FT			SEE GMP 9501									
M F 01571		LEAD ASSEMBLY: CONTACT SCREW TO JUMPER COIL MANUFACTURE FROM:	EA		1									39	8
XZF 01572	5940-681-9713	TERMINAL, LUG (96906) MS20659-4	EA		2										
P F 01573	6145-669-6781	WIRE, ELECTRICAL (8 IN. REQUIRED)	FT			SEE GMP 9501									

(1) SMR CODE / INDEX NO.	(2) FEDERAL STOCK NUMBER	(3) DESCRIPTION — REFERENCE NO. & MFR. CODE	USABLE ON CODE	(4) UNIT OF ISSUE	(5) QTY INC IN UNIT PACK	(6) QTY REQ EA UNIT	(7) 30-DAY DS MAINT ALLOWANCE (a) 1-20	(b) 21-50	(c) 51-100	(8) 30-DAY GS MAINT ALLOWANCE (a) 1-20	(b) 21-50	(c) 51-100	(9) 1-YR ALW PER 100 EQUIP CNTGCY	(10) DEPOT MAINT ALW-PER 100 EQUIP	(11) ILLUSTRATION (a) FIG NO.	(b) ITEM NO
P F 01588	5905-295-5560	RESISTOR, ADJUSTABLE: EXCITER FIELD (28035) M29784	B	EA		1	SEE GRP 0111									
P F 01589	5905-652-3254	RESISTOR, ADJUSTABLE: EXCITER FIELD, 30 OHM, 40 WATT, FOR 60 CYCLE OPERATION (28035) AA531	A	EA		1	SEE GRP 0111									
P F 01590	5905-279-5723	RESISTOR, FIXED WIRE WOUND: GENERATOR FIELD DISCHARGE, 300 OHM, 40 WATT (28035) CW1150		EA		1	SEE GRP 0111									
F 01591	5305-042-0994	SCREW, ASSEMBLED WASHER: BEARING SUPPORT BRACKET MTG (00000) 120994	B	EA		2	•	•	•	•	•	•	•	•		
A F 01592		SCREW, ASSEMBLED WASHER: CONTACT ASSY MTG		EA		3										
F 01593	5305-988-1170	SCREW, MACHINE: CONTACT ASSY MTG (96906) MS35206-284	B	EA		3	•	•	•	•	•	•	•	•	39	66
F 01594	5310-010-3319	WASHER, LOCK: CONTACT ASSY MTG (96906) MS35338-6	B	EA		3	•	•	•	•	•	•	•	•		
F 01595	5305-042-0994	SCREW, ASSEMBLED WASHER: PANEL LINK MTG (00000) 120994	B	EA		1	•	•	•	•	•	•	•	•		
A F 01596		SCREW, ASSEMBLED WASHER: STATIONARY YOKE MTG	B	EA		4										
F 01597	5305-988-1170	SCREW, MACHINE: STATIONARY YOKE MTG (96906) MS35206-284	B	EA		4	•	•	•	•	•	•	•	•	39	52
F 01598	5305-010-3319	WASHER, LOCK: STATIONARY YOKE MTG (96906) MS35338-6	B	EA		4	•	•	•	•	•	•	•	•	39	5
F 01599	5305-071-2238	SCREW, CAP, HEXAGON HEAD: BUS MTG (96906) MS90725-13	B	EA		2	•	•	•	•	•	•	•	•	39	1
F 01600	5305-068-0500	SCREW, CAP, HEXAGON HEAD: COIL BRACKET MTG (96906) MS90725-3		EA		2	•	•	•	•	•	•	•	•	39	47
F 01601	5305-225-3839	SCREW, CAP, HEXAGON HEAD: CONTACT ASSY MTG (96906) MS90725-8	B	EA		3	•	•	•	•	•	•	•	•	39	65
F 01602	5305-225-3840	SCREW, CAP, HEXAGON HEAD: STATIONARY CONTACT BUS BAR TO PANEL (96906) MS90725-7	A	EA		3	•	•	•	•	•	•	•	•	39	65

(1) SMR CODE / INDEX NO.	(2) FEDERAL STOCK NUMBER	(3) DESCRIPTION — REFERENCE NO. & MFR CODE / USABLE ON CODE	(4) UNIT OF ISSUE	(5) QTY INC IN UNIT PACK	(6) QTY INC IN UNIT	(7) 30-DAY DS MAINT ALLOWANCE (a) 1-20	(b) 21-50	(c) 51-100	(8) 30-DAY GS MAINT ALLOWANCE (a) 1-20	(b) 21-50	(c) 51-100	(9) 1-YR ALW PER 100 EQUIP CNTGCY	(10) DEPOT MAINT ALW-PER 100 EQUIP	(11) ILLUSTRATION (a) FIG NO.	(b) ITEM NO.
F 01603	5305-068-0500	SCREW, CAP, HEXAGON HEAD: TERMINAL LEAD TO SPECIAL NUT (96906) MS90725-3	EA		1	•	•	•	•	•	•	•	•	39	19
F 01604	5305-984-6193	SCREW, MACHINE: ARC SHIELD HOLDER A (96906) MS35206-245	EA		4	•	•	•	•	•	•	•	•	39	21
F 01605	5305-988-1727	SCREW, MACHINE: BUS BAR TO PANEL A (96906) MS35206-283	EA		1	•	•	•	•	•	•	•	•	39	4
F 01606	5305-054-6650	SCREW, MACHINE: ELECTRIC CONNECTION TO COIL B (96906) MS51957-26	EA		4	•	•	•	•	•	•	•	•	39	46
F 01607	5305-984-4983	SCREW, MACHINE: COIL JUMPER TO TERMINAL A (96906) MS35206-226	EA		4	•	•	•	•	•	•	•	•	39	46
F 01608	5305-290-2579	SCREW, MACHINE: CONTACT MTG	EA		3	•	•	•	•	•	•	•	•	39	24
F 01609	5305-988-1170	SCREW, MACHINE: CONTACT TO PANEL A (96906) MS35206-264	EA		3	•	•	•	•	•	•	•	•	39	66
F 01610	5305-297-8055	SCREW, MACHINE: EXCITER AND GENERATOR DISCHARGE RESISTOR ELECTRICAL LEAD MTG, No. 6-32 THD SIZE, 3/8 IN. LG	EA		8	SEE GMP 4411									
F 01611	5305-984-6218	SCREW, MACHINE: MOVABLE YOKE (96906) MS35206-271	EA		1	•	•	•	•	•	•	•	•	39	45
F 01612	5305-984-6189	SCREW, MACHINE: RESISTOR TO BRACKET (96906) MS35206-241	EA		4	SEE GMP 4411									
F 01613	5305-988-1726	SCREW, MACHINE: STATIONARY YOKE TO PANEL A (96906) MS35206-282	EA		4	•	•	•	•	•	•	•	•	39	52
F 01614	5305-988-1726	SCREW, MACHINE: SUPPORT BINDLE BEARING A (96906) MS35206-282	EA		2	•	•	•	•	•	•	•	•	39	39
XF 01615	5305-984-6214	SCREW, MACHINE: SWITCH LEAD MTG (96906) MS35206-267	EA		2									39	13
F 01616	5305-988-9265	SCREW, MACHINE: SWITCH PANEL TO BRACKET MTG (96906) MS35206-266	EA		4	•	•	•	•	•	•	•	•	39	57
F 01617	5305-883-0627	SCREW, TAPPING, THREAD FORMING: BAFFLE MTG B (96906) MS24637-23	EA		4	•	•	•	•	•	•	•	•	39	67

(1) SMR CODE / INDEX NO.	(2) FEDERAL STOCK NUMBER	(3) DESCRIPTION / REFERENCE NO. & MFR. CODE	USABLE ON CODE	(4) UNIT OF ISSUE	(5) QTY INC IN UNIT PACK	(6) QTY INC IN UNIT	(7) 30-DAY DS MAINT ALLOWANCE (a) 1-20	(b) 21-50	(c) 51-100	(8) 30-DAY GS MAINT ALLOWANCE (a) 1-20	(b) 21-50	(c) 51-100	(9) 1-YR ALW PER 100 EQUIP CNTGCY	(10) DEPOT MAINT ALW-PER 100 EQUIP	(11) ILLUSTRATION (a) FIG NO.	(b) ITEM NO
F 01633	5310-275-1706	NUT, PLAIN, HEXAGON: ADJUSTING SCREW (96906) MS35649-61		EA		2	•	•	•	•	•	•	•	•	39	36
F 01634	5310-012-0361	NUT, PLAIN, HEXAGON: OVERLOAD RESET BUTTON (96906) MS35649-102	A	EA		1	•	•	•	•	•	•	•	•		
F 01635	5305-889-3001	SCREW, MACHINE: ELEMENT ADJUSTING (96906) MS35206-231	B	EA		2	•	•	•	•	•	•	•	•	39	37
F 01636	5305-988-1721	SCREW, MACHINE: THERMAL HEATING ELEMENT MTG (96906) MS35206-277		EA		4	•	•	•	•	•	•	•	•	39	35
F 01637	5305-989-6224	SCREW, MACHINE: TRIP TO BLOCK (96906) MS35206-237		EA		1	•	•	•	•	•	•	•	•	39	29
F 01638	5305-068-0545	SCREW, TAPPING, THREAD FORMING: ELEMENT ADJUSTING (96906) MS24617-15	A	EA		2	•	•	•	•	•	•	•	•	39	37
X1 01639		TRIP, RELAY, OVERLOAD (28035) 5046231A		EA		1									39	27
F 01640	5310-010-3320	WASHER, LOCK: BLOCK TO PANEL SCREW (96906) MS35338-7		EA		2	•	•	•	•	•	•	•	•	39	32
F 01641	5310-989-2818	WASHER, FLAT: BEARING SUPPORT BRACKET MTG (96906) MS27183-32	B	EA		2	•	•	•	•	•	•	•	•	39	16
F 01642	5310-699-2710	WASHER, FLAT: BUS BAR, CONTACT AND SWITCH MTG 1/4 ID, 3/4 IN. OD	A	EA		8	•	•	•	•	•	•	•	•	39	6
F 01643	5310-849-7733	WASHER, FLAT: BUS MTG (96906) MS15795-311	B	EA		5	•	•	•	•	•	•	•	•	39	6
F 01644	5310-331-1996	WASHER, FLAT: CONTACT SCREW AND YOKE MTG (00000) 813479	A	EA		10	•	•	•	•	•	•	•	•	39	43
F 01645	5310-080-4862	WASHER, FLAT: CONTACT TO ARMATURE SHAFT, No. 8 ID, .437 OD (28035) 8130	B	EA		4	•	•	•	•	•	•	•	•	39	12
F 01646	5310-187-5342	WASHER, FLAT: BUSHLE BEARING SUPPORT SCREW, .313 ID, .750 OD	A	EA		2	•	•	•	•	•	•	•	•	39	16
F 01647	5310-849-7733	WASHER, FLAT: STATIONARY YOKE MTG, CONTACT ASSY MTG (96906) MS15795-311	B	EA		7	•	•	•	•	•	•	•	•	39	43

(1) SMR CODE / INDEX NO.	(2) FEDERAL STOCK NUMBER	(3) DESCRIPTION REFERENCE NO. & MFR. CODE — USABLE ON CODE	(4) UNIT OF ISSUE	(5) QTY INC IN UNIT PACK	(6) QTY INC IN UNIT	(7) 30-DAY DS MAINT ALLOWANCE (a) 1-20	(b) 21-50	(c) 51-100	(8) 30-DAY GS MAINT ALLOWANCE (a) 1-20	(b) 21-50	(c) 51-100	(9) 1-YR ALW PER 100 EQUIP CNTRCT	(10) DEPOT MAINT ALW-PER 100 EQUIP	(11) ILLUSTRATION (a) FIG NO.	(b) ITEM NO
XZF 01662	5930-343-0587	CLIP, SPRING TENSION (28035) 70	EA		4									37	31
XZG 01663	5935-258-4660	CONNECTOR, RECEPTACLE, ELECTRICAL: MULTIRANGE SWITCH (28035) AW795	EA		1									46	3
XZF 01664	5945-429-0929	CONTACT, ELECTRICAL (28035) AW306	EA		1									37	35
XZF 01665	5930-374-5039	CONTACT, ELECTRICAL: MOVABLE (28035) AW156	EA		2									37	11
XZF 01666	4940-750-7847	DISK, FRONT: MULTI-RANGE SWITCH (28035) AW31	EA		1									37	13
XZF 01667		HANDWHEEL ASSEMBLY: MULTI-RANGE SWITCH (28035) AW71	EA		1									37	19
XZ 01668		HOUSING, INSIDE: MULTI-RANGE SWITCH (28035) AW823	EA		1									37	4
XZF 01669	5970-447-4194	INSULATOR, CONTACT FINGER SCREW (28035) AW307	EA		2									37	37
M F 01670		LEAD ASSEMBLY: CONNECTOR TO OFF-ON SWITCH MANUFACTURE FROM:	EA		2									37	30
XZF 01671	5940-197-9782	TERMINAL, LUG (96906) MS20659-39	EA		2										
P F 01672	6145-192-3268	WIRE, ELECTRICAL (12 IN. REQUIRED FOR EACH LEAD ASSEMBLY)	FT			SEE MAP 9501									
O 01673	5310-331-1963	NUT, PLAIN, HEXAGON: MALE PLUG TO PANEL ASSY (00000) 0136960	EA		2	•	•	•	•	•	•	•	•	46	1
F 01674	5310-732-0958	NUT, PLAIN, HEXAGON: RESISTANCE SCREW ELEMENT MTG (96906) MS51967-8	EA		1	•	•	•	•	•	•	•	•	37	32
XZF 01675	5355-429-0935	PLATE, DIAL: MULTI-RANGE SWITCH (28035) AW373	EA		1									37	17
XZF 01676	5970-308-2814	PLATE, INSULATION, RANGE SWITCH (28035) AW929	EA		2									37	12

(1) SMR CODE / INDEX NO.	(2) FEDERAL STOCK NUMBER	(3) DESCRIPTION — REFERENCE NO. & MFR. CODE — USABLE ON CODE	(4) UNIT OF ISSUE	(5) QTY INC IN UNIT PACK	(6) QTY INC IN UNIT	(7) 30-DAY DS MAINT ALLOWANCE (a) 1-20	(b) 21-50	(c) 51-100	(8) 30-DAY GS MAINT ALLOWANCE (a) 1-20	(b) 21-50	(c) 51-100	(9) 1-YR ALW PER 100 EQUIP ONTOCY	(10) DEPOT MAINT ALW-PER 100 EQUIP	(11) ILLUSTRATION (a) FIG NO.	(b) ITEM NO
F 01692	5305-253-5618	SCREW, DRIVE: DISK MTG (96906) MS21318-27	EA		5	•	•	•	•	•	•	•	•	37	18
F 01693	5305-988-1721	SCREW, MACHINE: BRACKET MTG (96906) MS35206-277	EA		6	•	•	•	•	•	•	•	•	37	1
F 01694	5305-988-6208	SCREW, MACHINE: CATCH AND HANDWHEEL MTG (96906) MS35206-261	EA		7	•	•	•	•	•	•	•	•	37	5
F 01695	5305-988-1171	SCREW, MACHINE: CONTACT MTG (96906) MS35206-269	EA		2	•	•	•	•	•	•	•	•	37	40
O 01696	5305-290-2562	SCREW, MACHINE: MALE PLUG TO PANEL ASSY No. 6-32 THD SIZE, 3/4 IN. LG	EA		2	•	•	•	•	•	•	•	•	46	4
F 01697	5305-638-0343	SCREW, TAPPING, THREAD FORMING: HANDWHEEL TO BRACKET MTG, No. 8-15 THD SIZE, 3/8 IN. LG	EA		3	•	•	•	•	•	•	•	•	37	14
F 01698		WASHER, FLAT: CONTACT MTG SCREW (96906) MS27183-10	EA		2	•	•	•	•	•	•	•	•	37	38
F 01699	5310-045-5206	WASHER, FLAT: RHEOSTAT CATCH MTG (96906) MS15795-907	EA		1	•	•	•	•	•	•	•	•	37	7
F 01700	5310-889-2528	WASHER, LOCK: BRACKET TO HOUSING MTG SCREW (96906) MS19904-68	EA		2	•	•	•	•	•	•	•	•	37	2
F 01701	5310-582-5965	WASHER, LOCK: CONTACT MTG SCREW (96906) MS35338-44	EA		2	•	•	•	•	•	•	•	•	37	39
F 01702	5310-010-6997	WASHER, LOCK: HANDWHEEL MTG (96906) MS35338-5	EA		6	•	•	•	•	•	•	•	•	37	16
F 01703	5310-012-0380	WASHER, LOCK: HOUSING MTG (96906) MS35338-25	EA		4	•	•	•	•	•	•	•	•	37	29
O 01704	5310-045-4007	WASHER, LOCK: MALE PLUG TO PANEL ASSY (96906) MS35338-41	EA		2	•	•	•	•	•	•	•	•	46	2
F 01705	5310-080-9786	WASHER, LOCK: RHEOSTAT CATCH MTG (96906) MS19904-60	EA		1	•	•	•	•	•	•	•	•	37	6
XDF 01706	5330-447-4192	WASHER, NONMETALLIC: CONTACT MTG (28535) AK1074	EA		2										

(1) SMR CODE / INDEX NO.	(2) FEDERAL STOCK NUMBER	(3) DESCRIPTION — REFERENCE NO. & MFR. CODE	USABLE ON CODE	(4) UNIT OF ISSUE	(5) QTY INC IN UNIT PACK	(6) QTY INC IN UNIT	(7) 30-DAY DS MAINT ALLOWANCE (a) 1-20	(b) 21-50	(c) 51-100	(8) 30-DAY GS MAINT ALLOWANCE (a) 1-20	(b) 21-50	(c) 51-100	(9) 1-YR ALW PER 100 EQUIP CNTGCY	(10) DEPOT MAINT ALW-PER 100 EQUIP	(11) ILLUSTRATION (a) FIG NO.	(b) ITEM NO
01721		4411 - RESISTORS COMPONENTS														
X2F 01722		ADAPTER, RHEOSTAT (28835) DW4020		EA		1									36	12
X20 01723	5905-[illegible]-8575	BRACKET, RESISTOR (44655) 9	B	EA		1									44	10
X20 01724		CLIP, WIRE: RESISTOR ELECTRICAL LEAD (16004) 34461	B	EA		1										
X2F 01725	5977-[illegible]-0960	COLLAR, RIVET PIN: RHEOSTAT MTG SCREW (28835) C86	A	EA		2									36	59
X2F 01726	4940-[illegible]-5956	GROMMET, RESISTOR BRACKET (08315) 21-2-46	A	EA		1									40	9
X2F 01727	5325-281-1557	GROMMET, RUBBER: RESISTOR CABLE (96906) MS35489-17	A	EA		1									40	9
F 01728	5310-013-4530	NUT, PLAIN, HEXAGON: ELECTRICAL LEAD MTG (96906) MS35649-62	A	EA		4	•	•	•	•	•	•	•	•	39	60
F 01729	5310-281-1329	NUT, PLAIN, HEXAGON: ELECTRICAL LEAD TO RESISTOR MTG (19207) 7536477	B	EA		4	•	•	•	•	•	•	•	•	39	60
O 01730	5310-012-0622	NUT, PLAIN, HEXAGON: RESISTOR BRACKET MTG (96906) MS35649-82	B	EA		2	•	•	•	•	•	•	•	•	44	7
F 01731	5310-905-8451	NUT, PLAIN, HEXAGON: RESISTOR TERMINAL AND RESISTOR MTG (96906) MS21083N06	A	EA		5	•	•	•	•	•	•	•	•	28	9
F 01732	5310-761-6882	NUT, PLAIN, HEXAGON: VARIABLE RESISTOR MTG (96906) MS51967-2	B	EA		4	•	•	•	•	•	•	•	•	40	12
O 01733	5310-761-6882	NUT, PLAIN, HEXAGON: VARIABLE RESISTOR LEAD CLIP MTG (96906) MS51967-2	B	EA		1	•	•	•	•	•	•	•	•		
P F 01734	5905-295-5560	RESISTOR, ADJUSTABLE: EXCITER FIELD (28835) W2974M	B	EA		1	•	2	2	•	2	2	20	20	39	59
P F 01735	5905-652-3254	RESISTOR, ADJUSTABLE: EXCITER FIELD, 30 OHM, 40W FOR 60 CYCLE OPERATION (28835) AW531	A	EA		1	•	2	2	•	2	2	20	20	39	59

(1) SMR CODE / INDEX NO.	(2) FEDERAL STOCK NUMBER	(3) DESCRIPTION — REFERENCE NO. & MFR. CODE	USABLE ON CODE	(4) UNIT OF ISSUE	(5) QTY INC IN UNIT PACK	(6) QTY INC IN UNIT	(7) 30-DAY DS MAINT ALLOWANCE (a) 1-20	(b) 21-50	(c) 51-100	(8) 30-DAY GS MAINT ALLOWANCE (a) 1-20	(b) 21-50	(c) 51-100	(9) 1-YR ALW PER 100 EQUIP CNTGCY	(10) DEPOT MAINT ALW-PER 100 EQUIP	(11) ILLUSTRATION (a) FIG NO.	(b) ITEM NO
F 01750	5310-012-0961	NUT, PLAIN, HEXAGON: LEAD TO RESISTOR (96906) MS35649-102	A	EA		2	•	•	•	•	•	•	•	•	40	18
F 01751	5310-176-8133	NUT, PLAIN, HEXAGON: RESISTOR AND LEAD MTG (88044) AN340-6	A	EA		8	•	•	•	•	•	•	•	•	40	2
F 01752	5305-275-9310	NUT, PLAIN, HEXAGON: RESISTOR MTG (96906) MS35649-83	B	EA		4	•	•	•	•	•	•	•	•	40	2
P F 01753	5905-718-4932	RESISTOR, ADJUSTABLE (28835) W25T4J		EA		2	2	2	3	2	2	3	40	40	40	16
P F 01754	5905-745-7638	RESISTOR, FIXED, WIRE WOUND: PANEL (28835) AW2190		EA		1	•	2	2	•	2	2	20	20	40	11
F 01755	5305-068-0501	SCREW, CAP, HEXAGON HEAD: RESISTOR TO BOX MTG (96906) MS90725-5	A	EA		4	•	•	•	•	•	•	•	•	40	10
F 01756	5305-988-1725	SCREW, MACHINE: COVER MTG (96906) MS35206-281	A	EA		4	•	•	•	•	•	•	•	•	40	14
F 01757	5305-068-0502	SCREW, MACHINE: JUMPER LEAD MTG (96906) MS90725-6	B	EA		4	•	•	•	•	•	•	•	•	40	15
F 01758	5305-989-6210	SCREW, MACHINE: LEAD TO RESISTER (96906) MS35206-263	A	EA		2	•	•	•	•	•	•	•	•	40	15
F 01759	5305-989-8248	SCREW, MACHINE: RESISTOR AND LEAD MTG (96906) MS35273-15	A	EA		8	•	•	•	•	•	•	•	•	40	5
F 01760	5305-989-6193	SCREW, MACHINE: RESISTOR MTG AND LEAD MTG (96906) MS35206-245	B	EA		6	•	•	•	•	•	•	•	•	40	5
F 01761	5305-988-1725	SCREW, MACHINE: RESISTOR TO COVER (96906) MS35206-281		EA		4	•	•	•	•	•	•	•	•	40	10
F 01762	5310-045-5206	WASHER, FLAT: CABLE LEAD MTG (96906) MS15795-907	B	EA		4	•	•	•	•	•	•	•	•		
F 01763	5310-809-3078	WASHER, FLAT: COVER MTG (96906) MS27183-11	A	EA		4	•	•	•	•	•	•	•	•	40	4
F 01764	5310-582-5965	WASHER, LOCK: COVER AND RESISTOR MTG (96906) MS35338-44		EA		8	•	•	•	•	•	•	•	•	40	13
F 01765	5310-045-4007	WASHER, LOCK: JUMPER LEAD MTG (96906) MS35338-41	B	EA		8	•	•	•	•	•	•	•	•	40	19

(1) SMR CODE / INDEX NO.	(2) FEDERAL STOCK NUMBER	(3) DESCRIPTION — REFERENCE NO. & MFR CODE — USABLE ON CODE	(4) UNIT OF ISSUE	(5) QTY INC IN UNIT PACK	(6) QTY INC IN UNIT	(7) 30-DAY DS MAINT ALLOWANCE (a) 1-20	(b) 21-50	(c) 51-100	(8) 30-DAY GS MAINT ALLOWANCE (a) 1-20	(b) 21-50	(c) 51-100	(9) 1-YR ALW PER 100 EQUIP CNTGCY	(10) DEPOT MAINT ALW-PER 100 EQUIP	(11) ILLUSTRATION (a) FIG NO.	(b) ITEM NO
F 01618	5305-965-7306	SCREW, TAPPING, THREAD FORMING: BAFFLE TO PLATE (96906) MS24621-56	B	EA		4	•	•	•	•	•	•	•	•	39 67
F 01619	5305-883-0628	SCREW, TAPPING, THREAD FORMING: HOLDER MTG (96906) MS24617-21	B	EA		4	•	•	•	•	•	•	•	•	39 21
KZH 01620		SHAFT ASSEMBLY, ARMATURE (26835) 5046461		EA		1									39 42
KZF 01621		SHIELD ASSEMBLY, ARC (26835) 5045331A	A	EA		1									39 41
KZF 01622		SHIELD ASSEMBLY ARC (26835) 5045392A	B	EA		1									39 41
XI 01623		BLOWOUT, SA (26835) 5045704	B	EA		3									
XI 01624		SHIELD, ARC (26835) 5045722	B	EA		1									
XZF 01625	4940-966-7236	SPACER, COIL (26835) 5045251	B	EA		1									
XZF 01626		SPACER, PANEL: SWITCH TO BRACKET (26835) 5046017		EA		4									39 56
P F 01627	3431-005-8957	SWITCH ASSEMBLY: SHUTOFF (26835) 2946234		EA		1	•	•	•	•	•	•	6	5	
XZH 01628		TRIP ASSEMBLY, OVERLOAD (26835) 5045392A1		EA		1									39 38
XI 01629		BLOCK, TRIP ASSEMBLY (26835) 5045598		EA		1									39 28
F 01630	5305-225-8497	BOLT, MACHINE: LEAD TO BLOCK		EA		2	•	•	•	•	•	•	•	•	39 33
XI 01631		BUTTON, OVERLOAD RESET: RED (26835) 5045148		EA		1									39 31
XI 01632	5945-802-8496	ELEMENT, THERMAL HEATING BI-METALLIC: 45 AMP (26835) 5045496		EA		2									39 34

(1) SMR CODE / INDEX NO.	(2) FEDERAL STOCK NUMBER	(3) DESCRIPTION / REFERENCE NO. & MFR. CODE / USABLE ON CODE	(4) UNIT OF ISSUE	(5) QTY INC IN UNIT PACK	(6) QTY INC IN UNIT	(7) 30-DAY DS MAINT ALLOWANCE (a) 1-20	(b) 21-50	(c) 51-100	(8) 30-DAY GS MAINT ALLOWANCE (a) 1-20	(b) 21-50	(c) 51-100	(9) 1-YR ALW PER MD EQUIP CNTGCY	(10) DEPOT MAINT ALW-PER 100 EQUIP	(11) ILLUSTRATION (a) FIG NO.	(b) ITEM NO
F 01648	5310-045-5806	WASHER, FLAT: SWITCH LEAD AND CONTACT MOUNT TO ARMATURE SHAFT (96906) MS15795-907 A	EA		8	•	•	•	•	•	•	•	•	39	12
F 01649	5310-582-5965	WASHER, LOCK: BEARING SUPPORT, COIL BRACKET AND SWITCH BRACKET (96906) MS35338-44	EA		8	•	•	•	•	•	•	•	•	39	15
F 01650	5310-012-0214	WASHER, LOCK: BUS BAR AND TRIP ASSY MTG (96906) MS35338-26	EA		2	•	•	•	•	•	•	•	•	39	2
F 01651	5310-582-5965	WASHER, LOCK: CONTACT ASSY MTG (96906) MS35338-44 B	EA		3	•	•	•	•	•	•	•	•	39	11
F 01652	5310-010-0497	WASHER, LOCK: CONTACT MOUNT TO ARMATURE SHAFT, LEADS AND YOKE MTG (96906) MS35338-5 A	EA		11	•	•	•	•	•	•	•	•	39	11
F 01653	5310-045-3296	WASHER, LOCK: CONTACT TO ARMATURE SHAFT AND MOVABLE YOKE (96906) MS35338-43 B	EA		11	•	•	•	•	•	•	•	•	39	11
0 01654	5310-045-4007	WASHER, LOCK: ELECTRICAL LEAD MTG (96906) MS35338-41	EA		4	SEE DWG 4311									
F 01655	5310-010-3319	WASHER, LOCK: SHUNT BUS BAR, YOKE AND TERMINAL LEAD SCREW (96906) MS35338-6 A	EA		9	•	•	•	•	•	•	•	•	39	9
XBF 01656	4940-404-4536	YOKE, ELECTRICAL SWITCH (28035) 5048431	EA		1									39	44
XBF 01657	5930-831-3979	YOKE, SWITCH: STATIONARY (28035) 5048269	EA		1									39	51
P F 01658	5930-780-0011	SWITCH, ROTARY: 10 RANGE WELDING VOLTAGE CONTROL (28035) AW725-1	EA		1	•	•	2	•	•	2	6	5		
XBF 01659		BRACKET: PLUG MTG (28035) AW37	EA		1									37	3
XBF 01660		BRACKET, HANDWHEEL MOUNTING (28035) AW334	EA		3									37	15
XBF 01661	5930-378-5041	CLIP, ELECTRICAL (28035) AW65	EA		1									37	8

(1) SMR CODE / INDEX NO.	(2) FEDERAL STOCK NUMBER	(3) DESCRIPTION REFERENCE NO. & MFR. CODE — USABLE ON CODE	(4) UNIT OF ISSUE	(5) QTY INC IN UNIT PACK	(6) QTY INC IN UNIT	(7) 30-DAY DS MAINT ALLOWANCE (a) 1-20	(b) 21-50	(c) 51-100	(8) 30-DAY GS MAINT ALLOWANCE (a) 1-20	(b) 21-50	(c) 51-100	(9) 1-YR ALW PER 100 EQUIP ENTOCY	(10) DEPOT MAINT ALW-PER 100 EQUIP	(11) ILLUSTRATION (a) FIG NO.	(b) ITEM NO
X2F 01677	5905-447-1196	RESISTANCE ELEMENT (28035) AA335	EA		1									37	33
P O 01678	5905-089-9078	RHEOSTAT ASSEMBLY (28035) AA686-8	EA		1	•	•	2	•	•	2	6	5	44	5
P O 01679	2535-283-3052	CONNECTOR, RECEPTACLE, ELECTRICAL: FEMALE (28035) AA746	EA		1	•	•	2	•	•	2	6	5	37	28
X2F 01680	5355-447-4201	DIAL, CONTROL (28035) AA664	EA		1									37	23
X2F 01681	5355-712-1364	HANDWHEEL, RHEOSTAT (28035) AA719	EA		1									37	20
X1 01682		HOUSING: RHEOSTAT (28035) AA662	EA		1									37	24
P F 01683	5905-971-5004	RHEOSTAT (44655) A18491	EA		1	•	•	2	•	•	2	6	5	37	27
F 01684	5305-993-1849	SCREW, MACHINE: BRACKET MTG (96906) MS35207-259	EA		2	•	•	•	•	•	•	•	•	37	25
F 01685	5305-988-6191	SCREW, MACHINE: DIAL MTG (96906) MS35206-243	EA		4	•	•	•	•	•	•	•	•	37	22
F 01686	5305-723-9389	SETSCREW: HANDWHEEL MTG (96906) MS51963-69	EA		1	•	•	•	•	•	•	•	•	37	21
X2F 01687	5905-378-5042	SPRING, RHEOSTAT MOUNTING (28035) AA764	EA		2									37	26
F 01688	5310-010-6197	WASHER, LOCK: RHEOSTAT SPRING (96906) MS35338-5	EA		2	•	•	•	•	•	•	•	•	37	16
X2F 01689	5930-447-4251	RING, CONTACT (28035) DA6904A	EA		2									37	9
X2F 01690	3431-387-9866	RING, CONTACT, CONTROL: MULTI-BANDE SWITCH (28035) DA6939	EA		1									37	10
F 01691	5305-269-3206	SCREW, CAP, HEXAGON HEAD: RESISTANCE (96906) MS90725-55	EA		1	•	•	•	•	•	•	•	•	37	34

(1) SMR CODE — INDEX NO.	(2) FEDERAL STOCK NUMBER	(3) DESCRIPTION — REFERENCE NO. & MFR. CODE	USABLE ON CODE	(4) UNIT OF ISSUE	(5) QTY INC IN UNIT PACK	(6) QTY INC IN UNIT	(7) 30-DAY DS MAINT ALLOWANCE (a) 1-20	(b) 21-50	(c) 51-100	(8) 30-DAY GS MAINT ALLOWANCE (a) 1-20	(b) 21-50	(c) 51-100	(9) 1-YR ALW PER 100 EQUIP CNTGCY	(10) DEPOT MAINT ALW-PER 100 EQUIP	(11) ILLUSTRATION (a) FIG NO.	(b) ITEM NO
P F 01707	5930-751-8978	SWITCH, ROTARY: POLARITY CONTROL (28835) SW753	A	EA		1	•	•	•	•	•	•	6	5	35	29
X1 01708		REG: WELDING POLARITY SWITCH (28835) SW753A	A	EA		1									35	26
F 01709	5305-908-4978	SCREW, MACHINE: SHAFT (96906) MS35206-221	A	EA		1	•	•	•	•	•	•	•	•	35	30
F 01710	5305-989-7434	SCREW, MACHINE: SWITCH TO KNOB (96906) MS35207-263	A	EA		1	•	•	•	•	•	•	•	•	35	29
P F 01711	5930-263-8369	SWITCH, ROTARY: POLARITY CONTROL (04009) 82818	B	EA		1	•	•	2	•	•	2	6	5	45	10
X2F 01712	5930-272-1382	SWITCH, TOGGLE: 3 POSITIONS (28835) AW794	B	EA		2									36	15
X2F 01713		STRIP: TOGGLE SWITCH MTG (28835) AW827		EA		2										
X2F 01714	5930-272-1382	SWITCH, TOGGLE: CONTROL PANEL (04009) 82634	A	EA		3									36	15
P F 01715	5930-263-2369	SWITCH, TOGGLE: ON-OFF, 50 TO 60 CYCLES (04009) 100006		EA		1	•	•	2	•	•	2	6	5	36	14
F 01716	5310-543-2705	WASHER, LOCK: RELAY BRACKET MTG (96906) MS35338-37	B	EA		2	•	•	•	•	•	•	•	•	38	4
F 01717	5310-543-2705	WASHER, LOCK: RESISTOR SWITCH ASSY MTG (96906) MS35338-37	B	EA		3	•	•	•	•	•	•	•	•	39	5
F 01718	5310-018-7241	WASHER, LOCK: ROTARY SWITCH MTG	A	EA		4	•	•	•	•	•	•	•	•	35	28
F 01719	5310-527-3289	WASHER, LOCK: ROTARY SWITCH MTG (96906) MS35333-23	B	EA		4	•	•	•	•	•	•	•	•	45	42
F 01720	5310-543-2705	WASHER, LOCK: ROTARY SWITCH MTG (96906) MS35338-37	B	EA		4	•	•	•	•	•	•	•	•	45	33

(1) SMR CODE / INDEX NO.	(2) FEDERAL STOCK NUMBER	(3) DESCRIPTION REFERENCE NO. & MFR. CODE — USABLE ON CODE	(4) UNIT OF ISSUE	(5) QTY INC IN UNIT PACK	(6) QTY INC IN UNIT	(7) 30-DAY DS MAINT ALLOWANCE (a) 1-20	(b) 21-50	(c) 51-100	(8) 30-DAY GS MAINT ALLOWANCE (a) 1-20	(b) 21-50	(c) 51-100	(9) 1-YR ALW PER 100 EQUIP CNTGCY	(10) DEPOT MAINT ALW-PER 100 EQUIP	(11) ILLUSTRATION (a) FIG NO.	(b) ITEM NO.
X20 01736	5905-158-4725	RESISTOR, ADJUSTABLE: OVERSPEED (44655) 0581 B	EA		1									44	9
P F 01737	5905-279-5723	RESISTOR, FIXED, WIRE WOUND: GENERATOR FIELD DISCHARGE, 300 OHM, 40W (28835) CW1150	EA		1	*	2	2	*	2	2	20	20	39	58
P F 01738	5905-856-2222	RESISTOR, VARIABLE: BATTERY CHARGING (28835) 8M809	EA		1	*	2	2	*	2	2	20	20		
X2F 01739		CABLE, RESISTOR (28835) 8M811	EA		1									40	8
X2F 01740		CLAMP: CABLE (28835) C500	EA		1									40	7
X1 01741		COVER, RESISTOR (28835) 8M806	EA		1									40	1
M F 01742		LEAD ASSEMBLY: RESISTOR JUMPER, LOWER MANUFACTURE FROM:	EA		1									40	6
X2F 01743	5940-538-1028	TERMINAL, LUG (96906) MS35436-6	EA		2										
P F 01744	6145-284-0326	WIRE, ELECTRICAL (3 IN. REQUIRED)	FT			SEE SMP 9501									
M F 01745		LEAD ASSEMBLY: RESISTOR JUMPER TOP MANUFACTURE FROM:	EA		1									40	17
X2F 01746	5940-538-1028	TERMINAL, LUG (96906) MS35436-6	EA		2										
P F 01747	6145-284-0326	WIRE, ELECTRICAL (4 IN. REQUIRED)	FT			SEE SMP 9501									
F 01748	5310-543-5636	NUT, PLAIN, HEXAGON: COVER AND RESISTOR MTG (96906) MS35691-302 A	EA		8	*	*	*	*	*	*	*	*	40	12
F 01749	5310-275-1706	NUT, PLAIN, HEXAGON: JUMPER LEAD MTG AND CABLE LOAD MTG (96906) MS35649-61 B	EA		10	*	*	*	*	*	*	*	*	40	15

(1) SMR CODE / INDEX NO.	(2) FEDERAL STOCK NUMBER	(3) DESCRIPTION — REFERENCE NO. & MFR. CODE / USABLE ON CODE	(4) UNIT OF ISSUE	(5) QTY INC IN UNIT PACK	(6) QTY INC IN UNIT	(7) 30-DAY DS MAINT ALLOWANCE (a) 1-20	(b) 21-50	(c) 51-100	(8) 30-DAY GS MAINT ALLOWANCE (a) 1-20	(b) 21-50	(c) 51-100	(9) 1-YR ALW PER GROUP CNTGCY	(10) DEPOT MAINT ALW-PER 100 EQUIP	(11) ILLUSTRATION (a) FIG NO.	(b) ITEM NO
F 01766	5310-043-2226	WASHER, LOCK: LEAD TO RESISTOR (96906) MS35338-24 A	EA		2	•	•	•	•	•	•	•	•	40	19
F 01767	5310-045-4007	WASHER, LOCK: RESISTOR AND LEAD MTG (96906) MS35338-41 A	EA		8	•	•	•	•	•	•	•	•	40	3
F 01768	5310-045-3899	WASHER, LOCK: RESISTOR MTG AND LEAD MTG (96906) MS35338-42 B	EA		10	•	•	•	•	•	•	•	•	40	3
P F 01769	5905-845-9272	RESISTOR, VARIABLE: BATTERY CHARGING SELECTOR AND WELDER HIGH AND LOW VOLTAGE (28035) AW162	EA		2	2	2	3	2	2	3	40	40	36	6
X29 01770	5905-447-4206	HANDWHEEL: RESISTOR (28035) AW729	EA		2									36	29
F 01771	5305-724-6798	SETSCREW: HAND WHEEL (96906) MS51960-49	EA		2	•	•	•	•	•	•	•	•	36	28
X30 01772	6115-085-3099	PLATE, INSTRUCTION: RHEOSTAT (28035) A891	EA		1	SEE MP 2210									
0 01773	5305-880-5938	SCREW, DRIVE: RHEOSTAT NAME PLATE AND INSTRUCTION PLATE MTG (96906) MS21318-19	EA		6	SEE MP 2210									
P F 01774	5905-716-5912	RESISTOR, VARIABLE: OVERSPEED RELAY (44655) 0963	EA		1	•	2	2	•	2	2	12	20	28	5
0 01775	5305-068-0502	SCREW, CAP, HEXAGON HEAD: VARIABLE RESISTOR LEAD CLIP (96906) MS90725-6 B	EA		1	•	•	•	•	•	•	•	•		
F 01776	5305-013-0688	SCREW, MACHINE: BATTERY RESISTOR MTG, 1/4-20 THD SIZE, 1/2 IN. LG A	EA		2	•	•	•	•	•	•	•	•	35	23
F 01777	5305-988-1723	SCREW, MACHINE: BATTERY RESISTOR MTG (96906) MS35206-279 A	EA		2	•	•	•	•	•	•	•	•		
F 01778	5305-291-5095	SCREW, MACHINE: EXCITER AND GENERATOR DISCHARGE RESISTOR ELECTRICAL LEAD MTG, No. 6-32 THD SIZE, 3/8 IN. LG	EA		8	•	•	•	•	•	•	•	•	35	68
0 01779	5305-018-1832	SCREW, MACHINE: RESISTOR BRACKET MTG (96906) MS35206-243 B	EA		2	•	•	•	•	•	•	•	•	44	11

(1) SMR CODE / INDEX NO.	(2) FEDERAL STOCK NUMBER	(3) DESCRIPTION / REFERENCE NO. & MFR. CODE / USABLE ON CODE	(4) UNIT OF ISSUE	(5) QTY INC IN UNIT PACK	(6) QTY INC IN UNIT	(7) 30-DAY DS MAINT ALLOWANCE (a) 1-20	(b) 21-50	(c) 51-100	(8) 30-DAY GS MAINT ALLOWANCE (a) 1-20	(b) 21-50	(c) 51-100	(9) 1-YR ALW PER 100 EQUIP CNTGCY	(10) DEPOT MAINT ALW-PER 100 EQUIP	(11) ILLUSTRATION (a) FIG NO.	(b) ITEM NO
F 01780	5305-984-6189	SCREW, MACHINE: RESISTOR TO BRACKET (96906) MS35206-241	EA		4	•	•	•	•	•	•	•	•	35	63
F 01781	5305-984-8248	SCREW, MACHINE: RESISTOR TERMINAL AND RESISTOR MTG A (96906) MS35273-15	EA		5	•	•	•	•	•	•	•	•	28	6
F 01782	5305-988-1731	SCREW, MACHINE: RHEOSTAT MTG A (96906) MS35206-290	EA		2	•	•	•	•	•	•	•	•	36	27
F 01783	5305-988-1732	SCREW, MACHINE: VARIABLE RESISTOR MTG B (96906) MS35206-291	EA		2	•	•	•	•	•	•	•	•	36	27
F 01784	5305-052-6920	SCREW, TAPPING, THREAD CUTTING: VARIABLE RESISTOR MTG B (96906) MS24629-56	EA		2	•	•	•	•	•	•	•	•	45	40
F 01785	5305-013-1299	SCREW, TAPPING, THREAD FORMING: ROTARY SWITCH MTG, No. 14-10 THD SIZE, 3/8 IN. LG A	EA		4	•	•	•	•	•	•	•	•	35	35
F 01786		SETSCREW: RHEOSTAT ADAPTER (96906) MS51021-58	EA		1	•	•	•	•	•	•	•	•	36	11
F 01789	5340-429-0969	SPACER, RHEOSTAT TO HOUSING: RHEOSTAT MTG SCREW (28835) DV1347	EA		4	•	•	•	•	•	•	•	•	36	13
F 01790	5310-010-3319	WASHER, LOCK: BATTERY RESISTOR MTG A (96906) MS35338-6	EA		2	•	•	•	•	•	•	•	•	35	22
F 01791	5310-010-6495	WASHER, LOCK: BATTERY RESISTOR MTG A (96906) MS35338-3	EA		2	•	•	•	•	•	•	•	•		
F 01792	5310-045-4007	WASHER, LOCK: ELECTRICAL LEAD MTG (96906) MS35338-41	EA		4	•	•	•	•	•	•	•	•	39	61
O 01793	5310-013-8530	WASHER, LOCK: RESISTOR BRACKET MTG B (96906) MS35333-21	EA		4	•	•	•	•	•	•	•	•	44	8
F 01794	5310-010-6495	WASHER, LOCK: RESISTOR TERMINAL AND MICROSWITCH MTG A (96906) MS35338-3	EA		5	•	•	•	•	•	•	•	•	28	8
F 01795	5310-010-3319	WASHER, LOCK: RHEOSTAT MTG A (96906) MS35338-6	EA		2	•	•	•	•	•	•	•	•		
F 01796	5310-527-3289	WASHER, LOCK: VARIABLE RESISTOR MTG B (96906) MS35333-23	EA		2	•	•	•	•	•	•	•	•	45	41

(1) SMR CODE / INDEX NO.	(2) FEDERAL STOCK NUMBER	(3) DESCRIPTION — REFERENCE NO. & MFR. CODE / USABLE ON CODE		(4) UNIT OF ISSUE	(5) QTY INC IN UNIT PACK	(6) QTY INC IN UNIT	(7) 30-DAY DS MAINT ALLOWANCE (a) 1-20	(b) 21-30	(c) 31-100	(8) 30-DAY GS MAINT ALLOWANCE (a) 1-20	(b) 21-30	(c) 31-100	(9) 1-YR ALW PER GS EQUIP CNTGCY	(10) DEPOT MAINT ALW-PER 100 EQUIP	(11) ILLUSTRATION (a) FIG NO.	(b) ITEM NO
P O 01810	6145-164-7027	WIRE, ELECTRICAL	A	FT			SEE GPP 9501									
		(4 IN. REQUIRED FOR EACH LEAD ASSEMBLY)														
M O 01811		LEAD ASSEMBLY: CAPACITOR	A	EA		2									34	21
		MANUFACTURE FROM:														
D20 01812	5975-543-1924	TERMINAL, LUG	A	EA		4										
P O 01813	6145-164-7027	WIRE, ELECTRICAL	A	FT			SEE GPP 9501									
		(2 IN. REQUIRED FOR EACH LEAD ASSEMBLY)														
O 01814	5310-012-0361	NUT, PLAIN, HEXAGON: CAPACITOR MTG (96906) MS35649-102	A	EA		4	•	•	•	•	•	•	•	•	31	8
O 01815	5310-012-1361	NUT, PLAIN, HEXAGON: CAPACITOR MTG (96906) MS35649-102	A	EA		4	•	•	•	•	•	•	•	•	36	2
O 01816	5310-012-0822	NUT, PLAIN, HEXAGON: CAPACITOR MTG (96906) MS35649-82	A	EA		8	•	•	•	•	•	•	•	•	31	5
O 01817	5310-543-5656	NUT, PLAIN, HEXAGON: CAPACITOR MTG (96906) MS35691-402	B	EA		2	•	•	•	•	•	•	•	•	35	12
O 01818	5310-732-0958	NUT, PLAIN, HEXAGON: GROUND STRAP TO BODY FLOOR (96906) MS51967-8	B	EA		1	•	•	•	•	•	•	•	•	44	25
D20 01819		RING: CAPACITOR MTG (20935) 120464	A	EA		1									34	26
A O 01820		SCREW, ASSEMBLED WASHER: CAPACITOR MTG	A	EA		6										
O 01821	5305-984-6191	SCREW, MACHINE (96906) MS35206-243	A	EA		6	•	•	•	•	•	•	•	•	34	22
O 01822	5310-045-3299	WASHER, LOCK (96906) MS35338-42	A	EA		6	•	•	•	•	•	•	•	•	34	23
O 01823	5305-269-3211	SCREW, CAP, HEXAGON HEAD: GROUND STRAP TO BODY FLOOR (96906) MS90725-60	B	EA		1	•	•	•	•	•	•	•	•	44	22
O 01824	5305-984-6212	SCREW, MACHINE: CAPACITOR MTG (96906) MS35206-265		EA		4	•	•	•	•	•	•	•	•	31	1

(1) SMR CODE — INDEX NO.	(2) FEDERAL STOCK NUMBER	(3) DESCRIPTION — REFERENCE NO. & MFR. CODE — USABLE ON CODE		(4) UNIT OF ISSUE	(5) QTY INC IN UNIT PACK	(6) QTY INC IN UNIT	(7) 30-DAY DS MAINT ALLOWANCE (a) 1-20	(b) 21-30	(c) 31-100	(8) 30-DAY GS MAINT ALLOWANCE (a) 1-20	(b) 21-30	(c) 31-100	(9) 1-YR ALW PER 100 EQUIP ENTGCY	(10) DEPOT MAINT ALW-PER 100 EQUIP	(11) ILLUSTRATION (a) FIG NO.	(b) ITEM NO
0 01840	5310-045-3296	WASHER, LOCK: CAPACITOR MTG (96906) MS35338-43	B	EA		2	•	•	•	•	•	•	•	•		
0 01841		WASHER, LOCK: CAPACITOR BRACKET MTG (96906) MS35904-58	B	EA		3	•	•	•	•	•	•	•	•	3	33
0 01842	5310-012-0360	WASHER, LOCK: GROUND STRAP MTG (96906) MS35338-25	B	EA		6	•	•	•	•	•	•	•	•	4	20
0 01843	5310-732-5981	WASHER, LOCK: GROUND STRAP TO FRAME (70189) 1222-07	B	EA		2	•	•	•	•	•	•	•	•	4	24
0 01844	5310-899-2528	WASHER, LOCK: RING TO END BELL (96906) MS35904-68	A	EA		2	•	•	•	•	•	•	•	•	3	27
01845		GROUP 67 - GAGES WEIGHING AND MEASURING DEVICES														
01846		6703 - HOURMETER														
XBF 01847	6645-736-0182	METER, TIME TOTALIZING (28035) W9917-2		EA		1									3	18
F 01848		SCREW, TAPPING, THREAD CUTTING: METER MTG (96906) MS24637-2	A	EA		3	•	•	•	•	•	•	•	•	3	19
F 01849	5305-879-3805	SCREW, TAPPING, THREAD FORMING: TIME METER MTG (96906) MS24637-1	B	EA		3	•	•	•	•	•	•	•	•	4	36
01850		GROUP 95 - GENERAL USE STANDARDIZED PARTS														
01851		9501 - BULK MATERIAL														
P F 01852	9530-278-0702	ALUMINUM ALLOY ROD		FT			•	•	•	•	•	•	•	•	10	10
P O 01853	9535-233-1860	ALUMINUM ALLOY SHEET		SH			•	•	•	•	•	•	10	10		
P O 01854	9515-267-1119	ALUMINUM STRIP, COLD ROLLED		FT			•	•	•	•	•	•	15	15		
P F 01855	5970-269-8410	INSULATION TAPE, ELECTRICAL		RL			•	•	•	•	•	•	100	100		

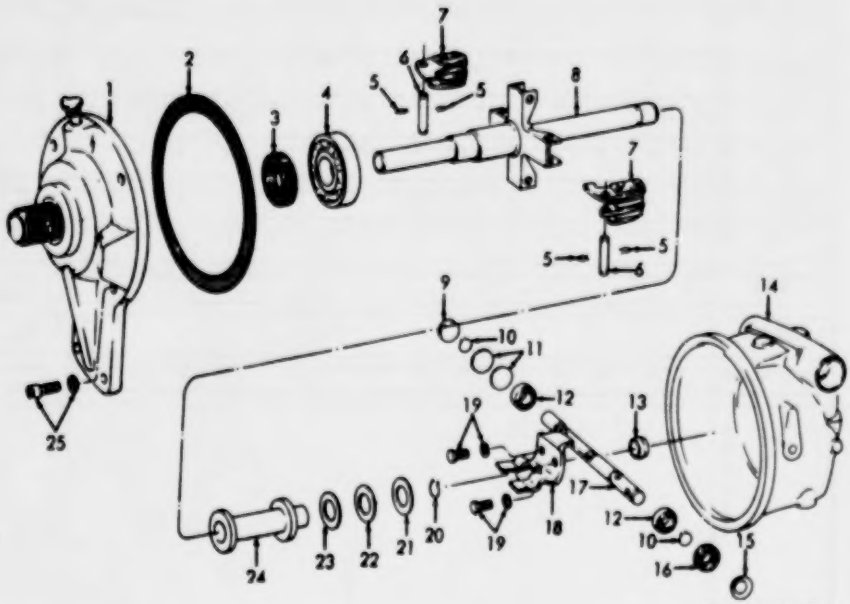

Figure No. 1 Governor

LEGEND TO PARTS, FIGURE 1

ITEM NO.	FUNCT GROUP	ITEM NAME	ITEM NO.	FUNCT GROUP	ITEM NAME	ITEM NO.	FUNCT GROUP	ITEM NAME
1	0308	FLANGE	10	0308	RING	18	0308	YOKE
2	0308	GASKET	11	0308	SPACER	19	0308	SCREW
3	0308	SEAL	12	0308	BEARING	20	0308	RING
4	0308	BEARING	13	0308	BUSHING	21	0308	WASHER
5	0308	CLIP	14	0308	HOUSING	22	0308	BEARING
6	0308	PIN	15	0308	RETAINER	23	0308	WASHER
7	0308	WEIGHT AY	16	0308	SEAL	24	0308	SLEEVE
8	0308	SHAFT-SPIDER	17	0308	SHAFT	25	0308	SLEEVE
9	0308	PLUG						

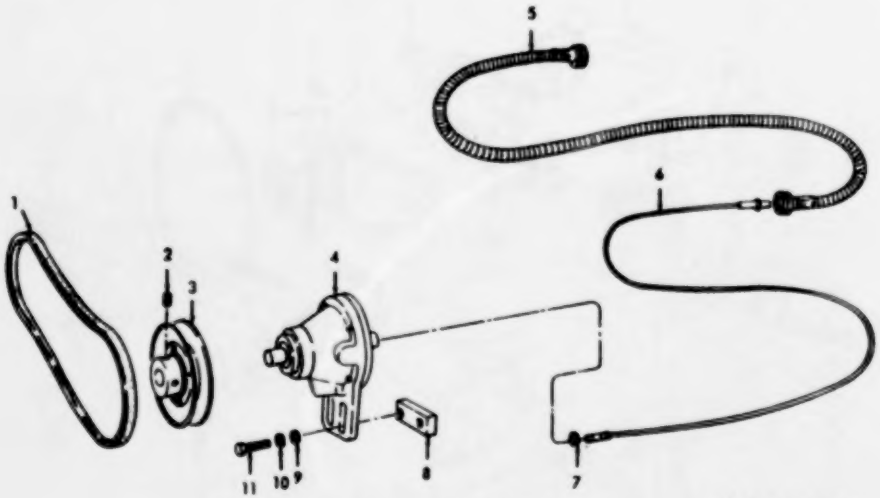

ME 4940-200-25P/3

Figure No. 3 Governor Drive, Cable And Components

LEGEND TO PARTS, FIGURE 3

ITEM NO.	FUNCT GROUP	ITEM NAME
1	0308	BELT
2	0308	SETSCREW
3	0308	PULLEY
4	0308	ADAPTER
5	0308	HOUSING
6	0308	CABLE
7	0308	RING
8	0308	BLOCK
9	0308	WASHER
10	0308	WASHER
11	0308	SCREW

LEGEND TO PARTS, FIGURE 5

ITEM NO.	FUNCT GROUP	ITEM NAME
1	0812	SCREW
2	0812	BRACKET
3	0812	BELLCRANK
4	0812	NUT
5	0812	WASHER
6	0812	LINK
7	0611	BRACKET
8	0812	STOP
9	0812	NUT
10	0812	ROD
11	0812	BALLJOINT
12	0812	SPRING
13	0812	CABLE
14	0812	WASHER
15	0812	CLAMP
16	0812	STOP
17	0812	SCREW

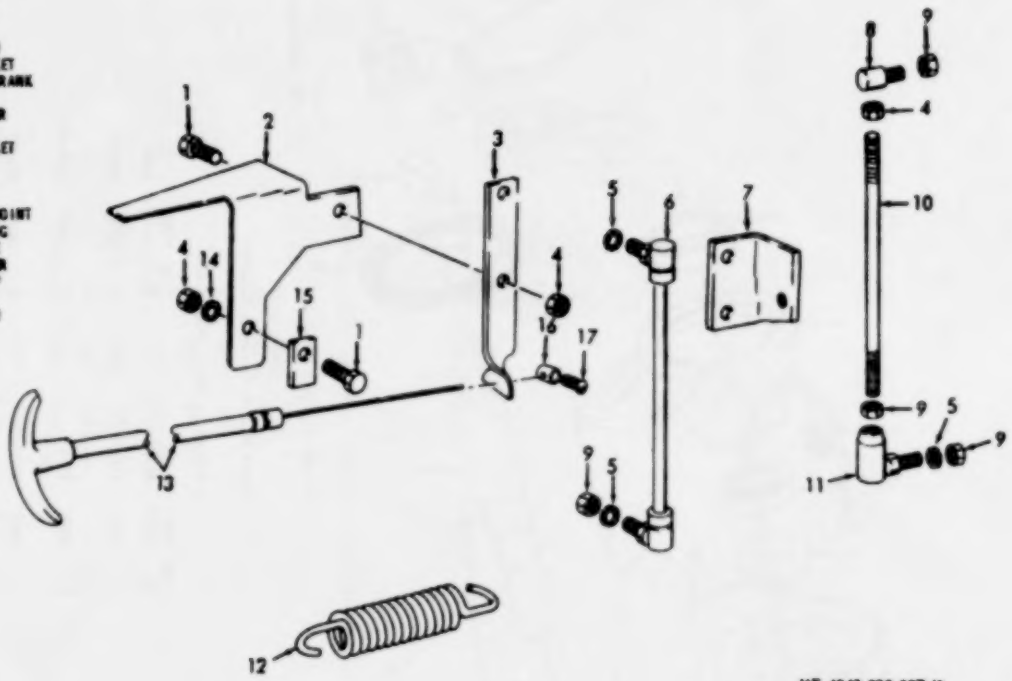

ME 4940-200-25P/5

Figure No. 5 Linkage

(1) SMR CODE / INDEX NO.	(2) FEDERAL STOCK NUMBER	(3) DESCRIPTION — REFERENCE NO. & MFR. CODE / USABLE ON CODE	(4) UNIT OF ISSUE	(5) QTY INC. IN UNIT PACK	(6) QTY INC. IN UNIT	(7) 30-DAY DS MAINT ALLOWANCE (a) 1-20	(b) 21-50	(c) 51-100	(8) 30-DAY GS MAINT ALLOWANCE (a) 1-20	(b) 21-50	(c) 51-100	(9) 1-YR ALW PER 100 EQUIP CNTGCY	(10) DEPOT MAINT ALW-PER 100 EQUIP	(11) ILLUSTRATION (a) FIG NO.	(b) ITEM NO
F 01797	5310-527-3298	WASHER, LOCK: VARIABLE RESISTOR MTG (96906) MS35333-23 B	EA		2	•	•	•	•	•	•	•	•	36	26
0 01798	5310-012-1637	WASHER, LOCK: VARIABLE RESISTOR LEAD CLIP MTG (96906) MS35338-25 B	EA		1	•	•	•	•	•	•	•	•		
01799		9413 - RADIO INTERFERENCE SUPPRESSION													
X2F 01800		BRACKET, CAPACITOR (28835) 8M6626 A	EA		1									36	1
P 0 01801	5910-504-7418	CAPACITOR, FIXED, PAPER DIELECTRIC: CONTROL PANEL (28835) CA481	EA		2	2	2	3	2	2	3	40	40	36	55
P 0 01802	5910-561-8847	CAPACITOR, FIXED, PAPER DIELECTRIC: CONTROL PANEL (28835) CA504	EA		6	3	5	10	3	5	10	120	120	41	2
P 0 01803	5910-669-3913	CAPACITOR, FIXED, PAPER DIELECTRIC: CONTROL PANEL (28835) CA484	EA		1	3	5	10	3	5	10	120	120	41	7
P 0 01804	5910-669-3913	CAPACITOR, FIXED, PAPER DIELECTRIC: CONTROL PANEL (28835) CA484 (INITIALLY SHOWN AS INDEX NO. 01803)	EA		1									36	3
P 0 01805	5910-561-8847	CAPACITOR, FIXED, PAPER DIELECTRIC: DC, BRUSH (28835) CA504 (INITIALLY SHOWN AS INDEX NO. 01802)	EA		4									34	11
P 0 01806	5910-669-3913	CAPACITOR, FIXED, PAPER DIELECTRIC: WELDER GENERATOR AC, BRUSH END (28835) CA484 (INITIALLY SHOWN AS INDEX NO. 01803)	EA		2									34	24
H 0 01807		LEAD ASSEMBLY: CAPACITOR A	EA		4									34	15
		MANUFACTURE FROM:													
X20 01808	5940-050-6210	TERMINAL LUG (00000) 506210 A	EA		4										
X2 01809	5975-543-1924	TERMINAL LUG A	EA		4										

SMR CODE / INDEX NO	(2) FEDERAL STOCK NUMBER	(3) DESCRIPTION — REFERENCE NO. & MFR. CODE	USABLE ON CODE	(4) UNIT OF ISSUE	(5) QTY INC IN UNIT PACK	(6) QTY INC IN UNIT	(7) 30-DAY DS MAINT ALLOWANCE (a) 1-20	(b) 21-50	(c) 51-100	(8) 30-DAY GS MAINT ALLOWANCE (a) 1-20	(b) 21-50	(c) 51-100	(9) 1-YR ALW PER 100 EQUIP CNTGCY	(10) DEPOT MAINT ALW-PER 100 EQUIP	(11) ILLUSTRATION (a) FIG NO.	(b) ITEM NO
0 01825	5305-984-6212	SCREW, MACHINE: CAPACITOR MTG (96906) MS35206-265	A	EA		4	•	•	•	•	•	•	•	•	36	5
0 01826	5305-984-6193	SCREW, MACHINE: CAPACITOR MTG (96906) MS35206-245	A	EA		2	•	•	•	•	•	•	•	•	41	4
0 01827	5305-984-6210	SCREW, MACHINE: CAPACITOR MTG (96906) MS35206-263	B	EA		4	•	•	•	•	•	•	•	•	36	5
0 01828	5305-984-6212	SCREW, MACHINE: CAPACITOR MTG (96906) MS35206-265	B	EA		2	•	•	•	•	•	•	•	•	44	39
0 01829	5305-895-0960	SCREW, TAPPING, THREAD CUTTING: CAPACITOR MTG (96906) MS24629-36	A	EA		4	•	•	•	•	•	•	•	•	34	14
0 01830	5305-052-6921	SCREW, TAPPING, THREAD CUTTING: RING TO BELL END (96906) MS24629-57	A	EA		2	•	•	•	•	•	•	•	•	34	28
X20 01831		STRAP, GROUND: BODY FLOOR TO FRAME (16004) 33995	B	EA		1									44	23
X20 01832		STRAP, GROUND: GENERATOR TO BODY FLOOR (16004) 33994	B	EA		1									44	21
0 01833	5310-809-8944	WASHER, FLAT: CAPACITOR MTG (96906) MS27183-7	A	EA		8	•	•	•	•	•	•	•	•	34	24
0 01834	5310-331-2001	WASHER, FLAT: CAPACITOR MTG (00000) 8137484	A	EA		4	•	•	•	•	•	•	•	•	34	12
0 01835	5310-527-3288	WASHER, LOCK: CAPACITOR (96906) MS35333-22	B	EA		8	•	•	•	•	•	•	•	•	36	4
0 01836	5310-596-7691	WASHER, LOCK: CAPACITOR MTG (96906) MS35335-32		EA		4	•	•	•	•	•	•	•	•	36	4
0 01837	5310-596-7691	WASHER, LOCK: CAPACITOR MTG (96906) MS35335-32		EA		2	•	•	•	•	•	•	•	•	41	3
0 01838		WASHER, LOCK: CAPACITOR MTG (96906) MS35904-58	A	EA		6	•	•	•	•	•	•	•	•	34	13
0 01839	5310-045-3299	WASHER, LOCK: CAPACITOR MTG (96906) MS35338-42	A	EA		2	•	•	•	•	•	•	•	•	41	6

SMR CODE / INDEX NO.	(2) FEDERAL STOCK NUMBER	(3) DESCRIPTION — REFERENCE NO & MFR CODE — USABLE ON CODE	(4) UNIT OF ISSUE	(5) QTY INC IN UNIT PACK	(6) QTY INC IN UNIT	(7) 30-DAY DS MAINT ALLOWANCE (a) 1-20	(b) 21-50	(c) 51-100	(8) 30-DAY GS MAINT ALLOWANCE (a) 1-20	(b) 21-50	(c) 51-100	(9) 1-YR ALW PER 100 EQUIP ENTGCY	(10) DEPOT MAINT ALW-PER 100 EQUIP	(11) ILLUS-TRATION (a) FIG NO.	(b) ITEM NO.
P O 01856	5510-255-9495	LUMBER, HARDWOOD	FT			•	•	•	•	•	•	20	20		
P F 01857	5530-129-2123	PLYWOOD	FT			•	•	•	•	•	•	10	10		
P O 01858	5330-202-4061	RUBBER SHEET, SOLID	FT			•	•	•	•	•	•	20	20		
P O 01859	6145-299-4430	WIRE, ELECTRICAL	FT			•	•	•	•	•	•	75	75		
P F 01860	6145-168-7026	WIRE, ELECTRICAL	FT			•	•	•	•	•	•	200	200		
P O 01861	6145-168-7027	WIRE, ELECTRICAL	FT			•	•	•	•	•	•	20	20		
P F 01862	6145-168-7033	WIRE, ELECTRICAL	FT			•	•	•	•	•	•	110	110		
P F 01863	6145-192-3268	WIRE, ELECTRICAL	FT			•	•	•	•	•	•	120	120		
P F 01864	6145-192-3318	WIRE, ELECTRICAL	FT			•	•	•	•	•	•	40	40		
P O 01865	6145-268-0326	WIRE, ELECTRICAL	FT			•	•	•	•	•	•	75	75		
P F 01866	6145-660-8933	WIRE, ELECTRICAL	FT			•	•	•	•	•	•	25	25		
P F 01867	6145-669-6781	WIRE, ELECTRICAL	FT			•	•	•	•	•	•	15	15		

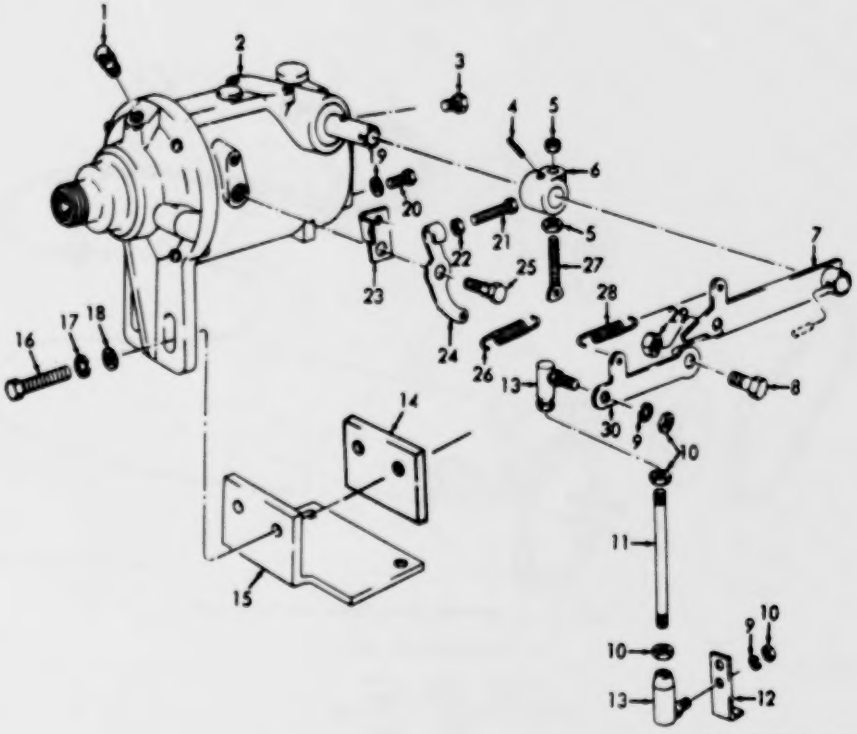

Figure No. 2 Governor And Components

LEGEND TO PARTS, FIGURE 2

ITEM NO.	FUNCT GROUP	ITEM NAME	ITEM NO.	FUNCT GROUP	ITEM NAME	ITEM NO.	FUNCT GROUP	ITEM NAME
1	0308	CUP	11	0308	ROD	21	0308	SETSCREW
2	0308	GOV ERNOR AT	12	0308	EXTENSION	22	0308	NUT
3	0308	OILER	13	0308	BALL JOINT	23	0308	BRACKET
4	0308	PIN	14	0308	BLOCK	24	0308	LEVER
5	0308	NUT	15	0308	BRACKET	25	0308	BOLT
6	0308	BRACKET	16	0308	SCREW	26	0308	SPRING
7	0308	LEVER AT	17	0308	WASHER	27	0308	BOLT
8	0308	SCREW	18	0308	WASHER	28	0308	SPRING
9	0308	WASHER	19	0308	GASKET	29	0308	NUT
10	0308	NUT	20	0308	SCREW	30	0308	LEVER

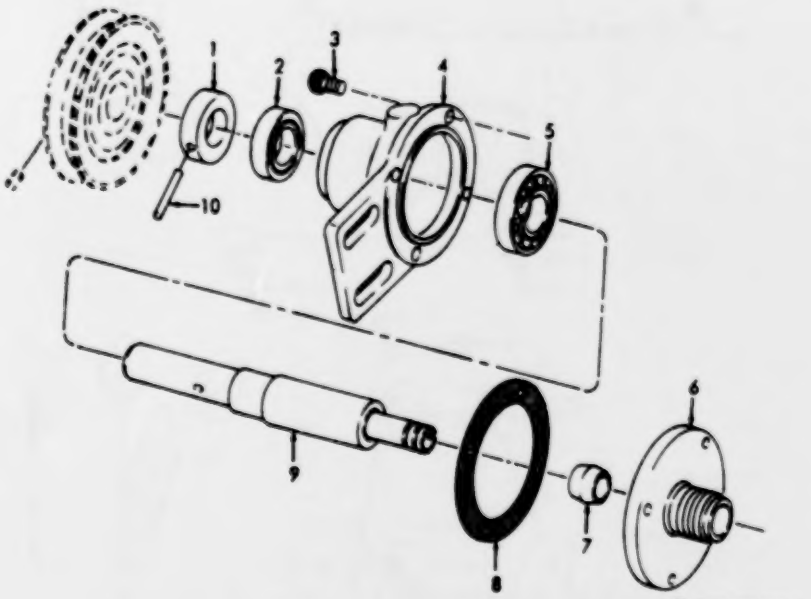

Figure No. 4 Governor Adapter

LEGEND TO PARTS, FIGURE 4

ITEM NO.	FUNCT GROUP	ITEM NAME	ITEM NO.	FUNCT GROUP	ITEM NAME
1	0308	COLLAR	6	0308	COVER
2	0308	SEAL	7	0308	BEARING
3	0308	SCREW	8	0308	GASKET
4	0308	BRACKET	9	0308	SHAFT
5	0308	BEARING	10	0308	PIN

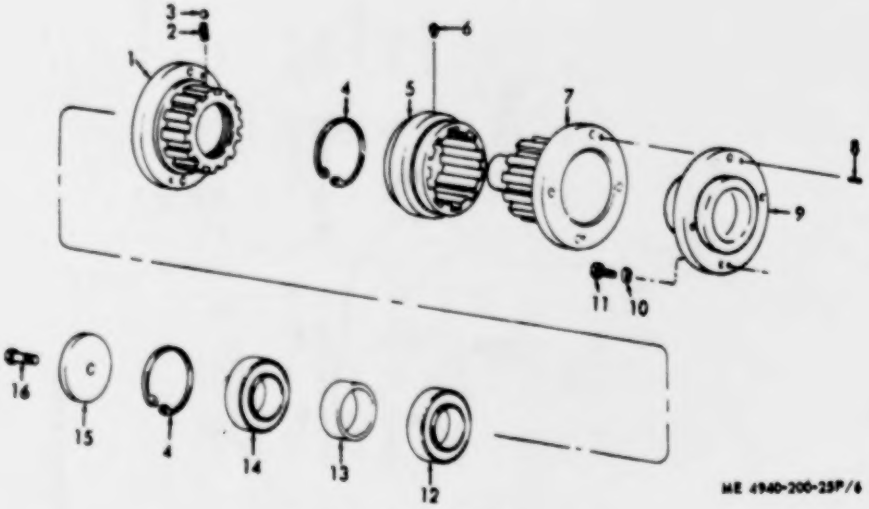

ME 4940-200-25P/6

Figure No. 6 Declutcher

LEGEND TO PARTS, FIGURE 6

ITEM NO.	FUNCT GROUP	ITEM NAME	ITEM NO.	FUNCT GROUP	ITEM NAME
1	0802	GEAR	9	0802	FLANGE
2	0802	SPRING	10	0802	WASHER
3	0802	BALL	11	0802	SCREW
4	0802	RING	12	0802	BEARING
5	0802	CLUTCH	13	0802	SPACER
6	0802	FITTING	14	0802	BEARING
7	0802	SHAFT	15	0802	WASHER
8	0802	PIN	16	0802	SCREW

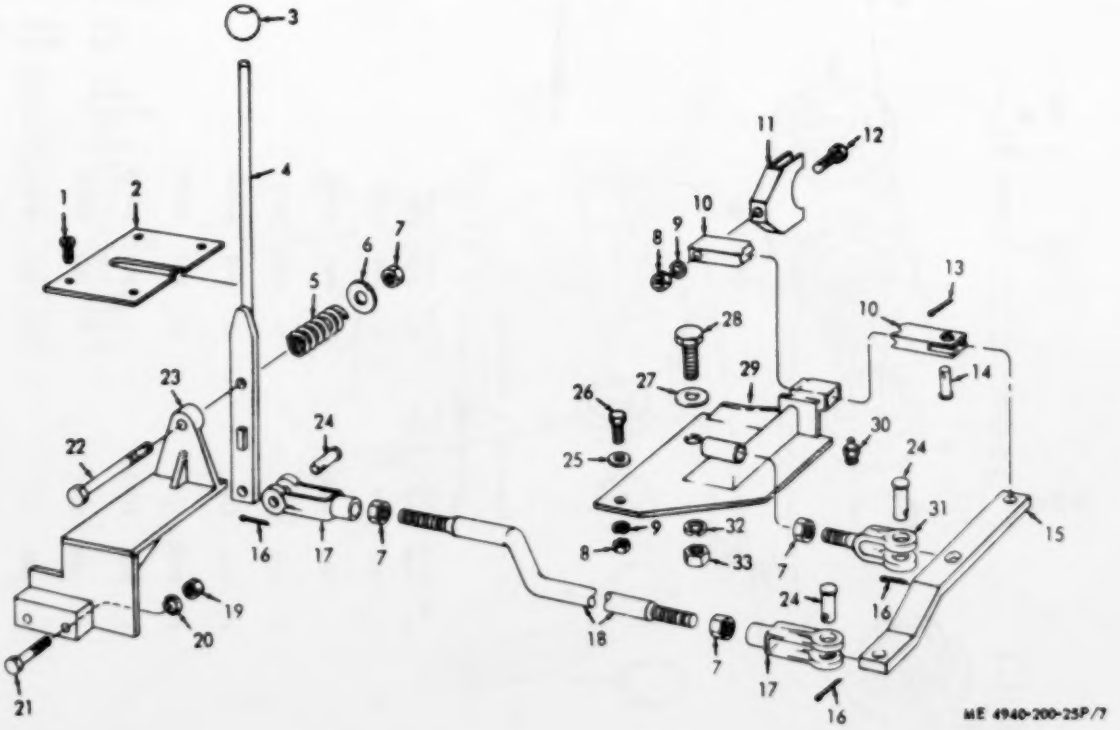

Figure No. 7 Declutcher Linkage

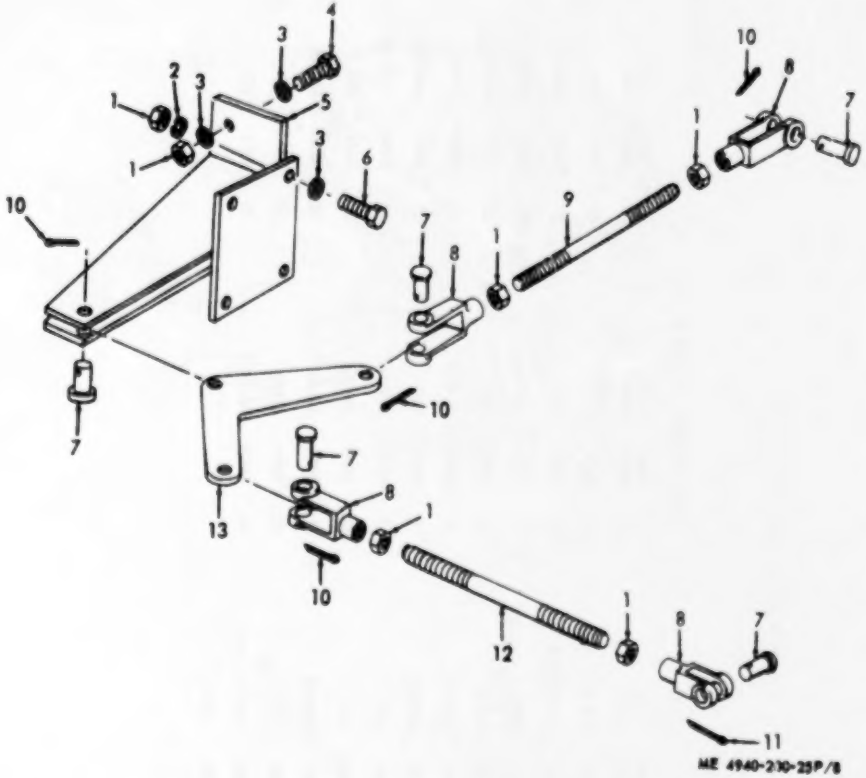

Figure No. 8 Operating Linkage

LEGEND TO PARTS, FIGURE 8

ITEM NO.	FUNCT GROUP	ITEM NAME	ITEM NO.	FUNCT GROUP	ITEM NAME	ITEM NO.	FUNCT GROUP	ITEM NAME
1	0803	NUT	6	0803	SCREW	10	0803	PIN
2	0803	WASHER	7	0803	PIN	11	0803	PIN
3	0803	WASHER	8	0803	CLEVIS	12	0803	ROD
4	0803	SCREW	9	0803	ROD	13	0803	BELLCRANK
5	0803	BRACKET						

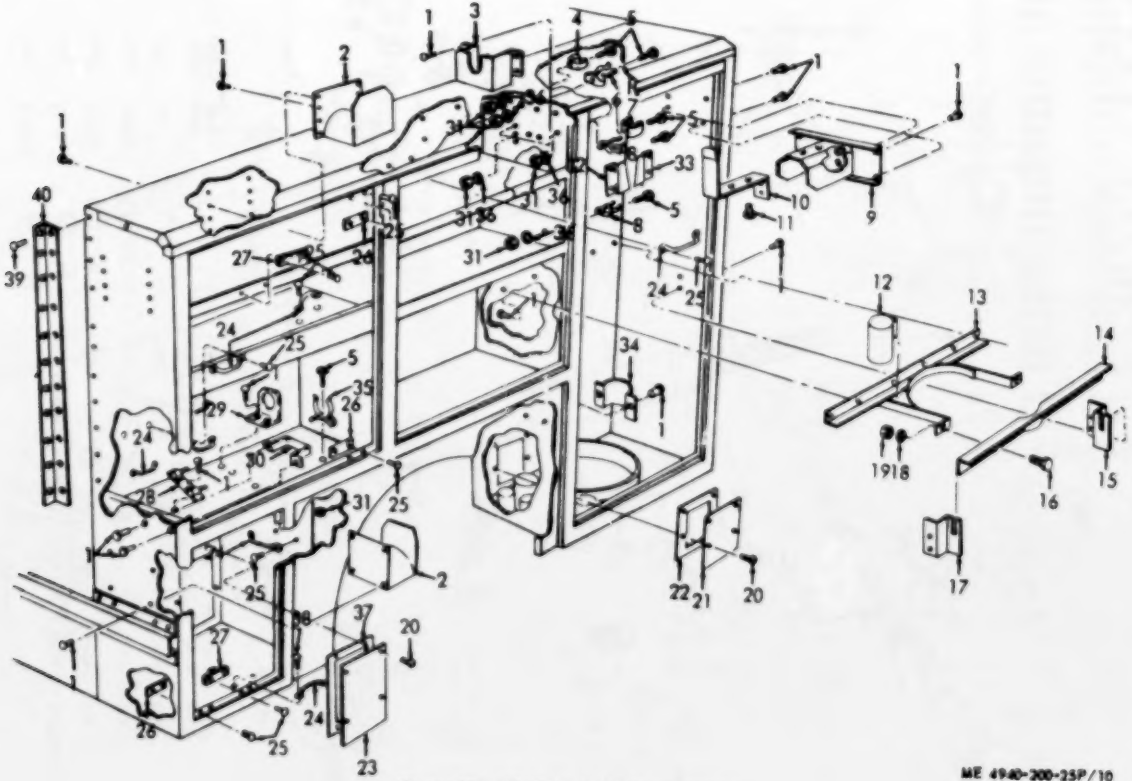

Figure No. 10 Right Side Compartment

ME 4940-200-25P/10

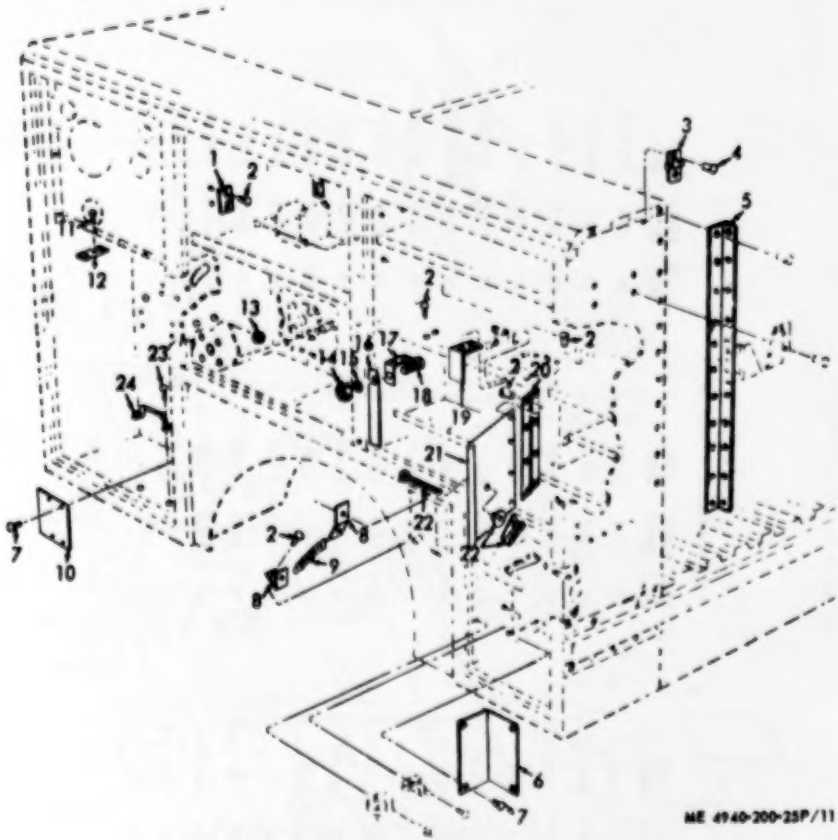

Figure No. 11 Left Side Compartment

LEGEND TO PARTS, FIGURE 11

ITEM NO.	FUNCT GROUP	ITEM NAME	ITEM NO.	FUNCT GROUP	ITEM NAME	ITEM NO.	FUNCT GROUP	ITEM NAME
1	1812	BRACKET	9	1812	SPRING	17	1812	ANGLE
2	1812	RIVET	10	1812	PLATE	18	1812	SCREW
3	1812	STOP	11	1812	RIVET	19	1812	BRACKET
4	1812	RIVET	12	1812	CLIP	20	1812	HINGE
5	1812	SUPPORT	13	0608	GROMMET	21	1812	DOOR
6	1812	PLATE	14	1812	NUT	22	1812	LATCH
7	1812	SCREW	15	1812	WASHER	23	1812	RIVET
8	1812	BRACKET	16	1812	STRAP	24	1812	LOOP

LEGEND TO PARTS, FIGURE 12

ITEM NO.	FUNCT GROUP	ITEM NAME	ITEM NO.	FUNCT GROUP	ITEM NAME
1	1812	NUT	17	1812	COVER
2	1812	WASHER	18	1812	SCREW
3	1812	BOARD	19	1812	SCREW
4	1812	SKIN	20	1812	NUT
5	1812	WASHER	21	1812	SPRING
6	1812	SCREW	22	1812	WASHER
7	1812	STRIP	23	1812	PIN
8	1812	FRAME	24	1812	SCREW
9	1812	STRAP	25	1812	BRACKET
10	1812	WASHER	26	1812	LATCH
11	1812	NUT	27	1812	BOLT
12	1812	PIN	28	1812	BOLT
13	1812	HINGE	29	1812	BOLT
14	1812	RIVET	30	1812	SCREW
15	1812	PIN	31	1812	BRACKET
16	1812	CHAIN			

LEGEND TO PARTS, FIGURE 13

ITEM NO.	FUNCT GROUP	ITEM NAME	ITEM NO.	FUNCT GROUP	ITEM NAME
1	1812	SCREW	15	1812	ROD-BRACE AY
2	1812	CLIP	16	1812	ROD
3	1812	SEAL	17	1812	NUT
4	1812	HINGE	18	1812	WASHER
5	1812	MOLDING	19	1812	PIN
6	1812	SCREW	20	1812	SCREW
7	1812	RIVET	21	1812	MOLDING
8	1812	RIVET	22	1812	ROD
9	1812	SCREW	23	1812	CLIP
10	1812	LOCK	24	1812	SHIM
11	1812	LOCK	25	1812	ROD
12	1812	MOLDING	26	1812	SEAL
13	1812	ROD	27	1812	HINGE
14	1812	ROD	28	1812	HINGE

LEGEND TO PARTS, FIGURE 14

ITEM NO.	FUNCT GROUP	ITEM NAME
1	1812	SHELF
2	1812	RIVET
3	1812	SHELF
4	1812	SUPPORT
5	1812	DIVIDER
6	1812	SCREEN AY
7	1812	SCREW
8	1812	RIVET
9	1812	SHELF
10	1812	SHELF
11	1812	SUPPORT
12	1812	SIDE
13	1812	SHELF
14	1812	CHANNEL

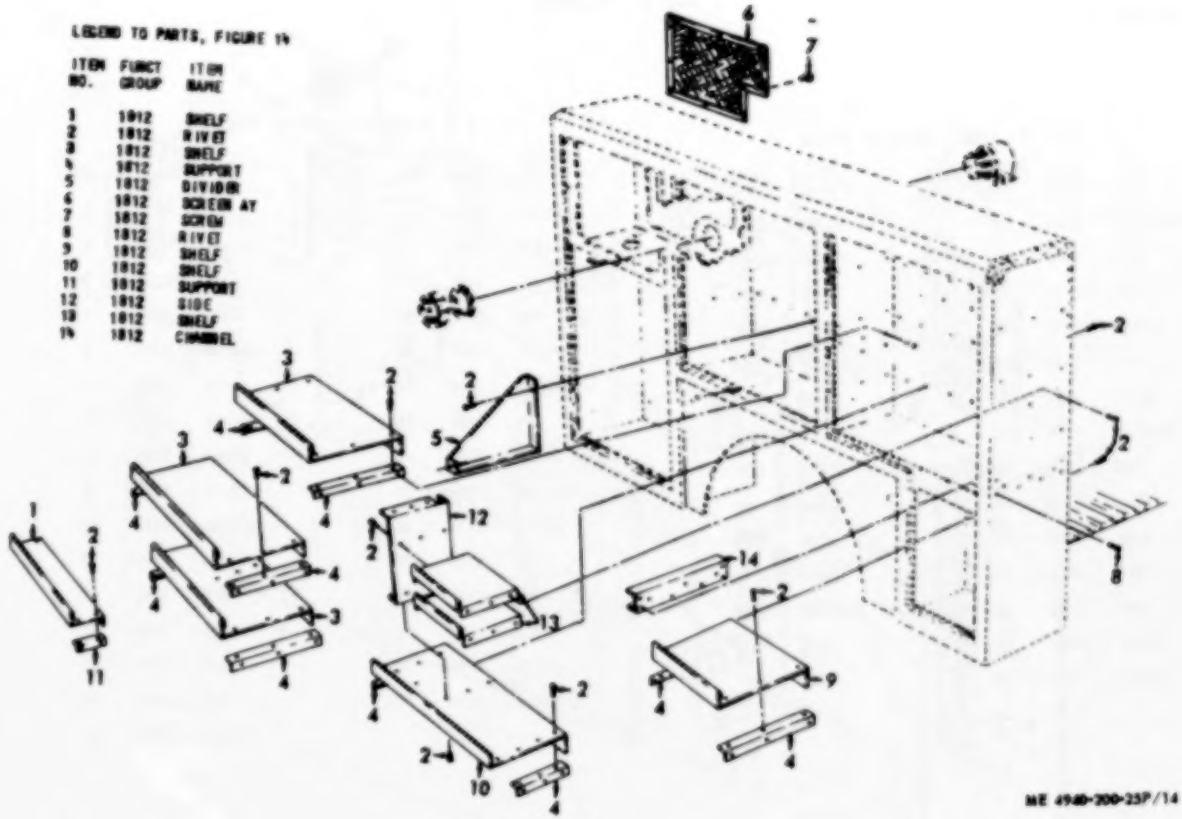

Figure No. 14 Left Side Compartment

LEGEND TO PARTS, FIGURE 7

ITEM NO.	FUNCT GROUP	ITEM NAME
1	0803	SCREW
2	0803	ESCUTCHEON
3	0803	KNOB
4	0803	LEVER
5	0803	SPRING
6	0803	WASHER
7	0803	NUT
8	0803	NUT
9	0803	WASHER
10	0803	BAR
11	0803	SHIFTER-SHOE
12	0803	SCREW
13	0803	PIN
14	0803	PIN
15	0803	LEVER
16	0803	PIN
17	0803	CLEVIS
18	0803	ROD
19	0803	NUT
20	0803	WASHER
21	0803	SCREW
22	0803	SCREW
23	0803	SUPPORT
24	0803	PIN
25	0803	WASHER
26	0803	SCREW
27	0803	WASHER
28	0803	SCREW
29	0803	BRACKET
30	0803	FITTING
31	0803	END
32	0803	WASHER
33	0803	NUT
34	0803	NUT

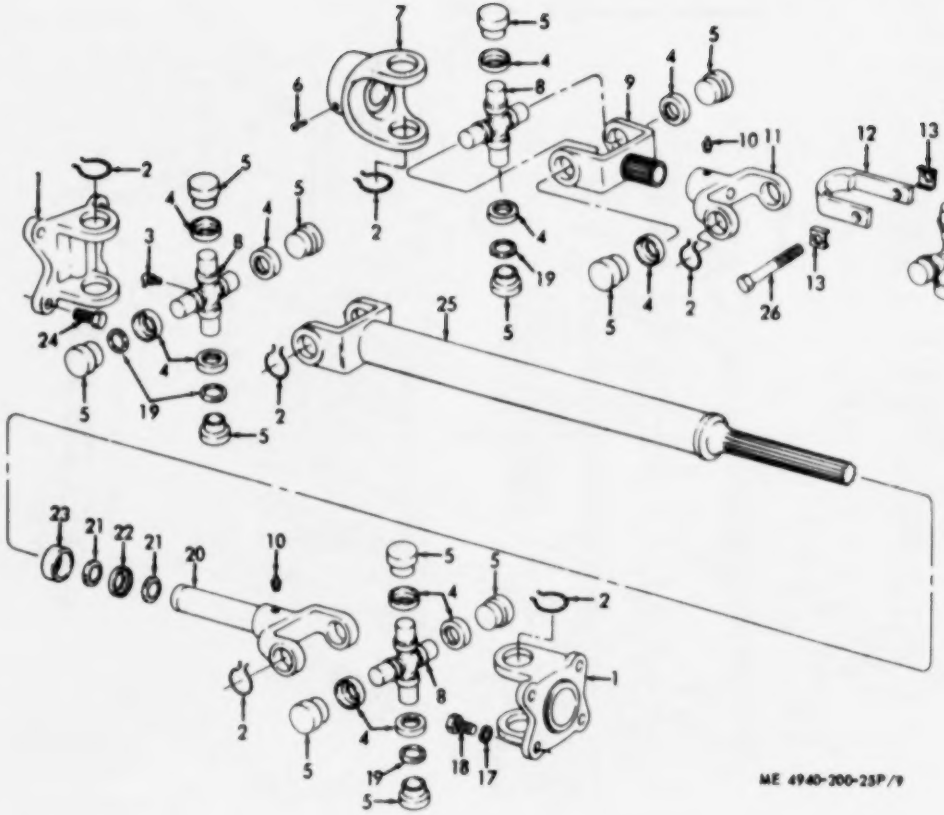

Figure No. 9 Universal Components

LEGEND TO PARTS, FIGURE 9

ITEM NO.	FUNCT GROUP	ITEM NAME
1	0802	FLANGE
2	0900	RING
3	0900	FITTING
4	0900	SEAL
5	0900	BEARING
6	0900	SETSCREW
7	0900	FLANGE
8	0900	CROSS
9	0900	YOKE
10	0900	FITTING
11	0900	YOKE
12	0900	RETAINER
13	0900	CLIP
14	0900	NUT
15	0900	SPIDER
16	0900	YOKE
17	0900	WASHER
18	0900	BOLT
19	0900	RETAINER
20	0900	YOKE
21	0900	WASHER
22	0900	SEAL
23	0900	RETAINER
24	0900	SCREW
25	0900	SHAFT
26	0900	BOLT

LEGEND TO PARTS, FIGURE 10

ITEM NO.	FUNCT GROUP	ITEM NAME
1	1812	RIVET
2	1812	BRACKET
3	1812	CONTAINER
4	1812	CLIP
5	1812	SCREW
6	1812	CLIP
7	1812	CLIP
8	1812	CLIP
9	1812	BRACKET
10	1812	PLATE
11	1812	RIVET
12	1812	CONTAINER
13	1812	BRACKET
14	1812	RETAINER
15	1812	GUIDE
16	1812	SCREW
17	1812	GUIDE
18	1812	WASHER
19	1812	NUT
20	1812	SCREW
21	1812	PLATE
22	1812	GASKET
23	1812	PLATE
24	1812	LOOP
25	1812	RIVET
26	1812	PLATE
27	1812	SHIM
28	1812	BRACKET
29	1812	BRACKET
30	1812	BRACKET
31	1812	NUT
32	1812	BRACKET
33	1812	BRACKET
34	1812	BRACKET
35	1812	CLIP
36	1812	WASHER
37	1812	GASKET
38	1812	RIVET
39	1812	RIVET
40	1812	SUPPORT

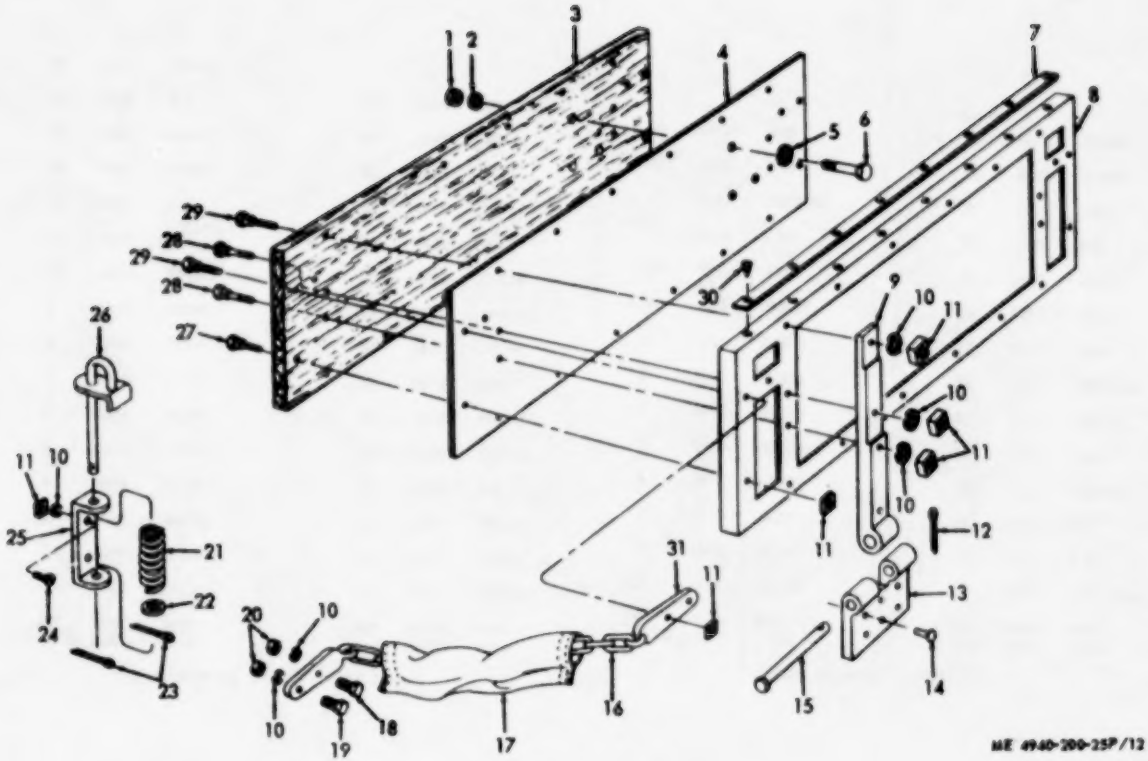

Figure No. 12 Tail Gate

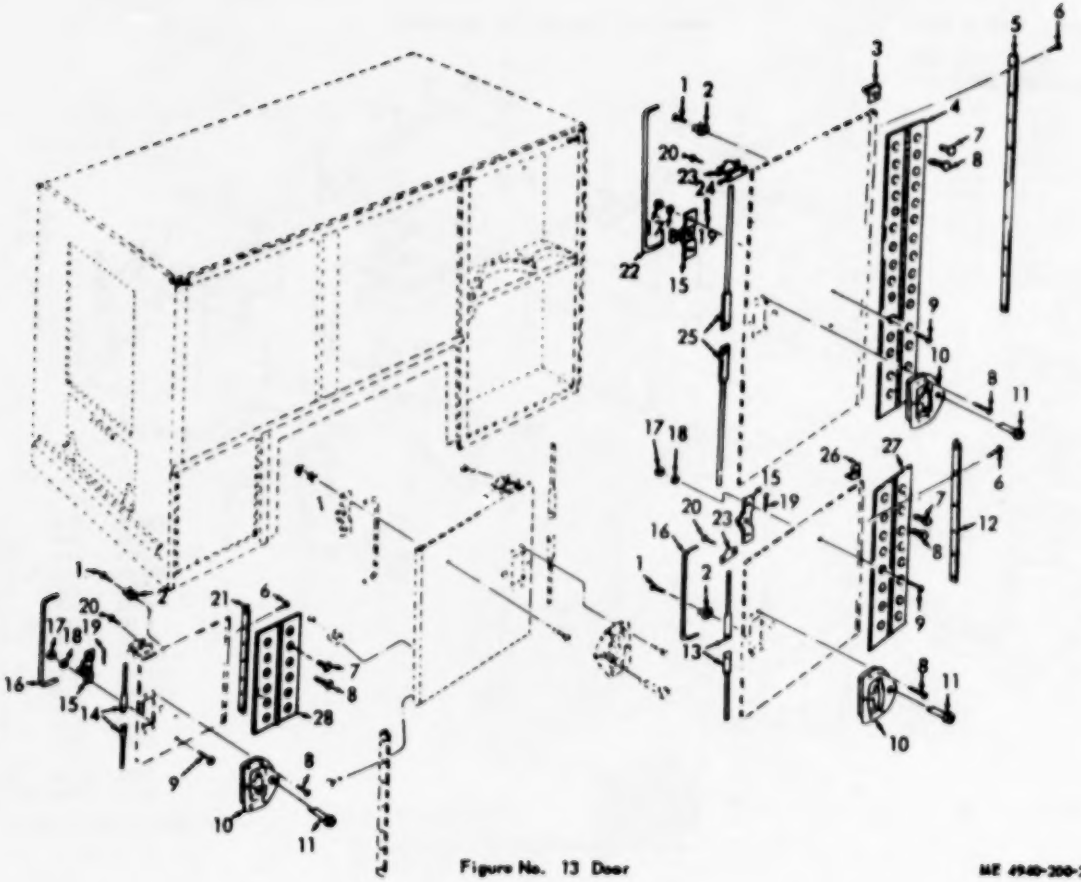

Figure No. 13 Door

ME 4940-200-23P/13

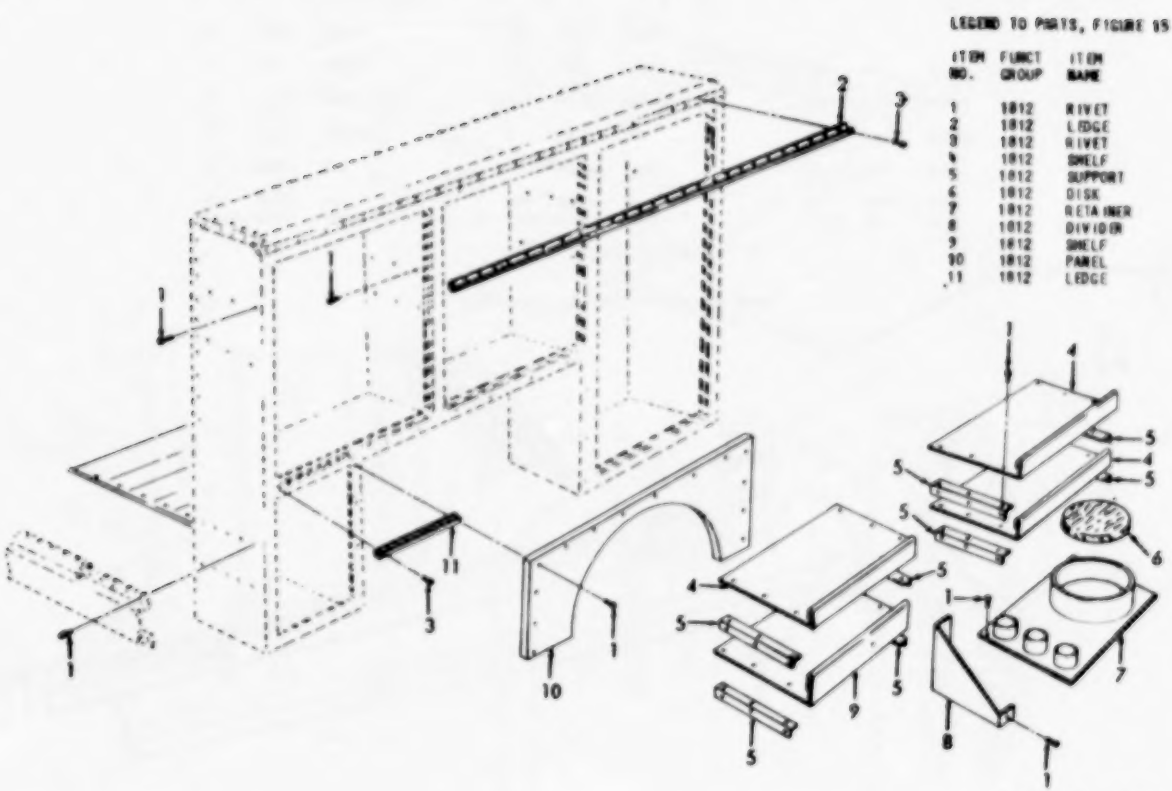

Figure No. 15 Right Side Compartment

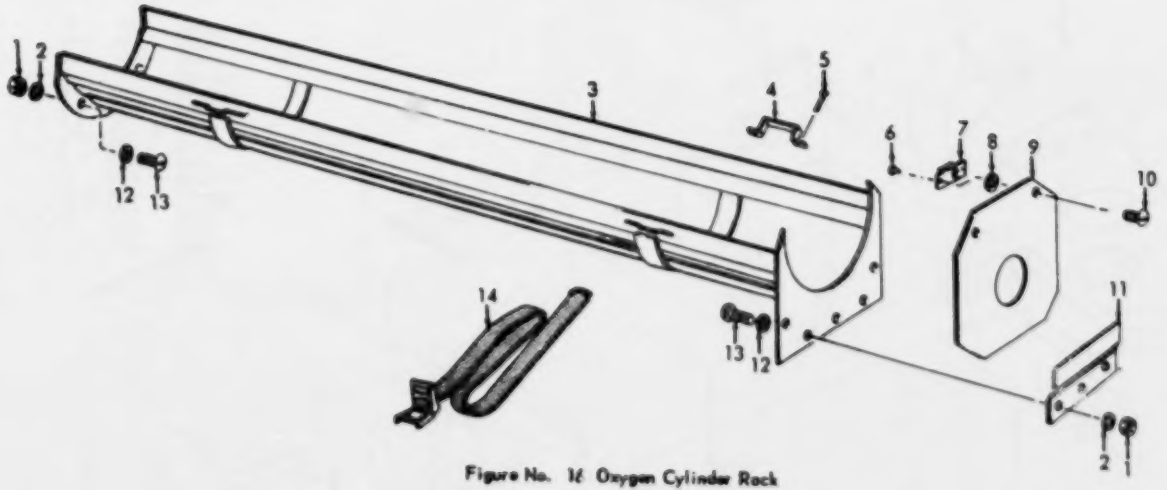

Figure No. 16 Oxygen Cylinder Rack

ME 4940-300-23P/16

LEGEND TO PARTS, FIGURE 16

ITEM NO.	FUNCT GROUP	ITEM NAME
1	1812	NUT
2	1812	WASHER
3	1812	RACK AY
4	1812	LOOPE
5	1812	RIVET
6	1812	RIVET
7	1812	NUT
8	1812	WASHER
9	1812	PLATE
10	1812	SCREW
11	1812	STOP
12	1812	WASHER
13	1812	SCREW
14	1812	STRAP

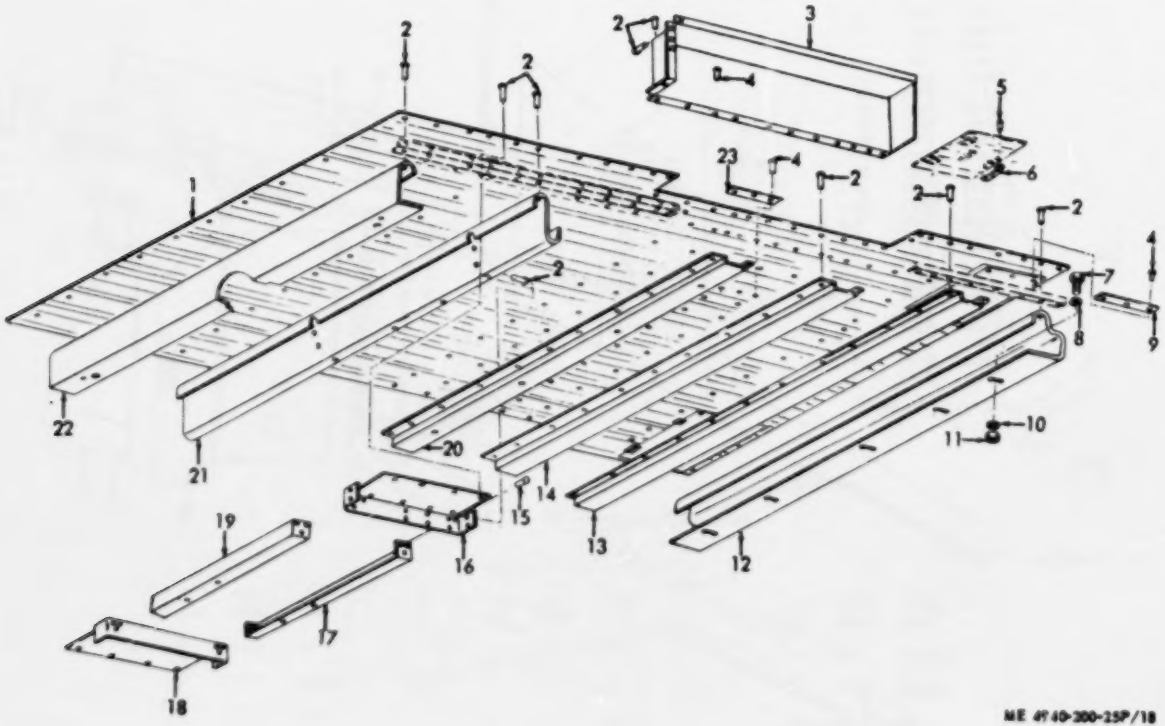

Figure No. 18 Floor

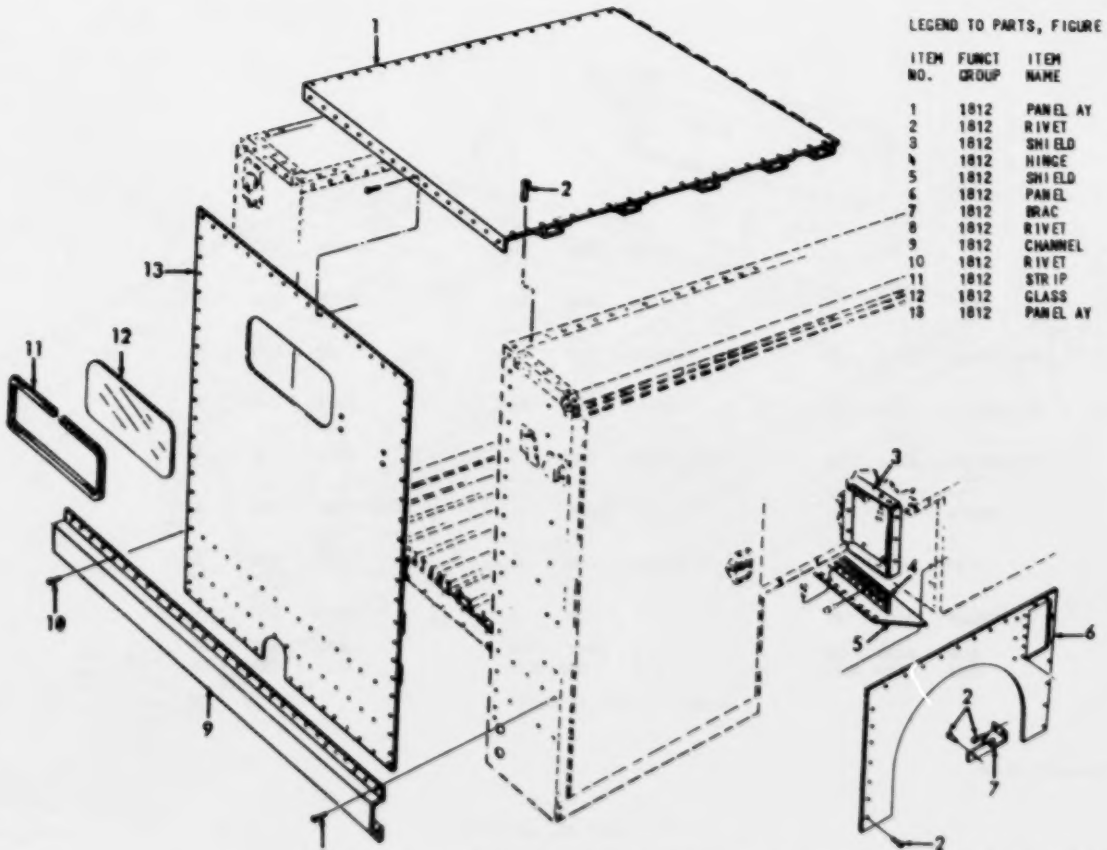

LEGEND TO PARTS, FIGURE 19

ITEM NO.	FUNCT GROUP	ITEM NAME
1	1812	PANEL AY
2	1812	RIVET
3	1812	SHIELD
4	1812	HINGE
5	1812	SHIELD
6	1812	PANEL
7	1812	BRAC
8	1812	RIVET
9	1812	CHANNEL
10	1812	RIVET
11	1812	STRIP
12	1812	GLASS
13	1812	PANEL AY

Figure No. 19 Roof & Front Panel, Wheel Housing Panel

ME 4940-200-25P/19

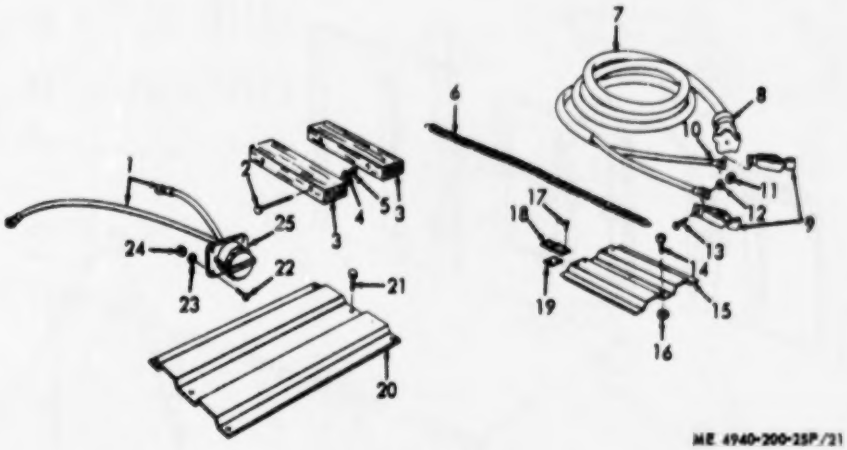

Figure No. 21 Slave Cable Receptacle & Components

LEGEND TO PARTS, FIGURE 21

ITEM #NO.	FUNCT GROUP	ITEM NAME	ITEM NO.	FUNCT GROUP	ITEM NAME
1	4216	RECEPTACLE	14	1812	SCREW
2	1812	BOLT	15	1812	PLATE
3	1812	SPACER	16	1812	WASHER
4	1812	WASHER	17	1812	RIVET
5	1812	NUT	18	1812	HINGE
6	1812	SPRING	19	1812	SPACER
7	4216	CABLE	20	1812	PLATE
8	4216	CONNECTOR	21	1812	SCREW
9	4216	CLIP	22	4216	SCREW
10	4216	TERMINAL	23	4216	WASHER
11	4216	NUT	24	4216	NUT
12	4216	WASHER	25	4216	CONNECTOR
13	4216	SCREW			

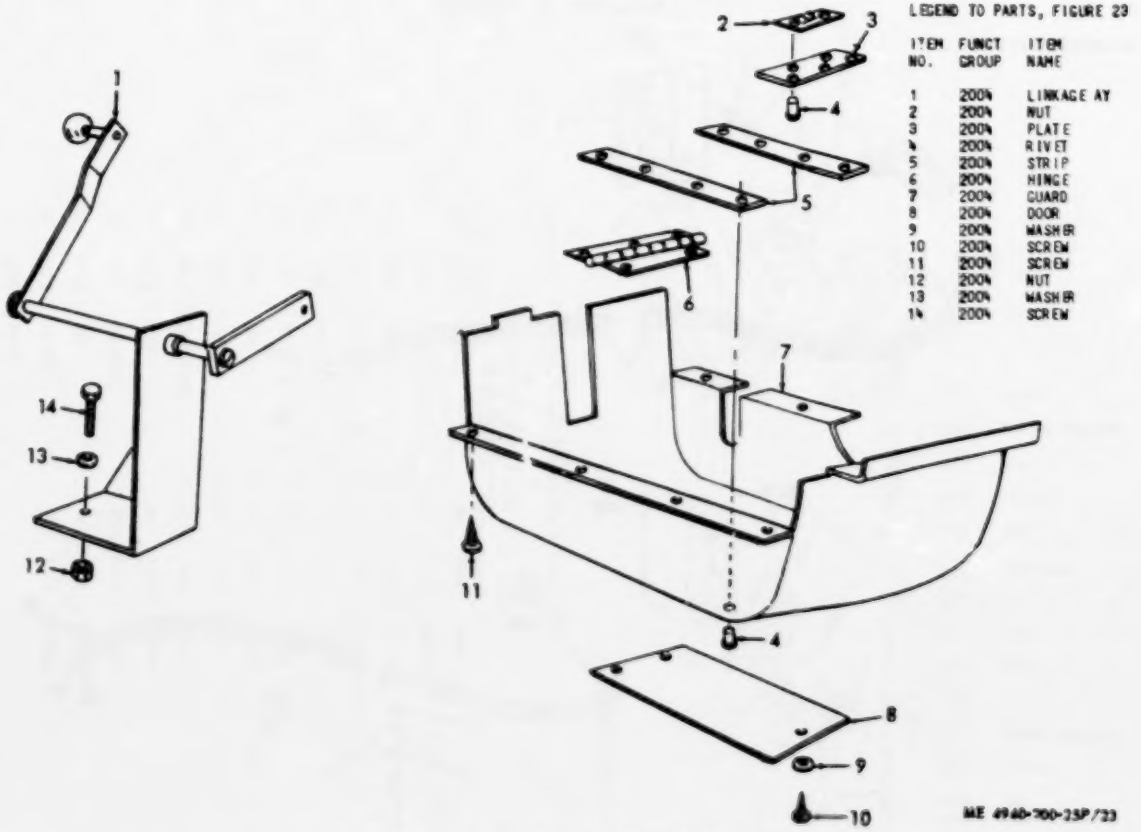

LEGEND TO PARTS, FIGURE 23

ITEM NO.	FUNCT GROUP	ITEM NAME
1	2004	LINKAGE AY
2	2004	NUT
3	2004	PLATE
4	2004	RIVET
5	2004	STRIP
6	2004	HINGE
7	2004	GUARD
8	2004	DOOR
9	2004	WASHER
10	2004	SCREW
11	2004	SCREW
12	2004	NUT
13	2004	WASHER
14	2004	SCREW

Figure No. 23 Power Divider Linkage And Guards

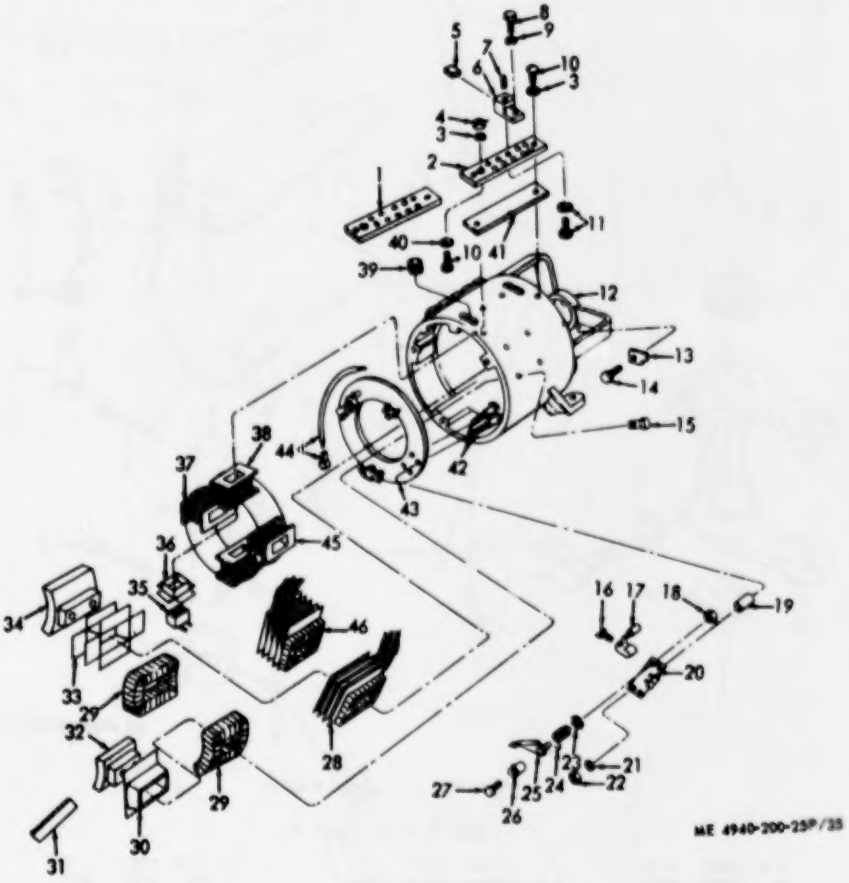

Figure No. 25 Generator Terminal Block, Brush Holders And Coils

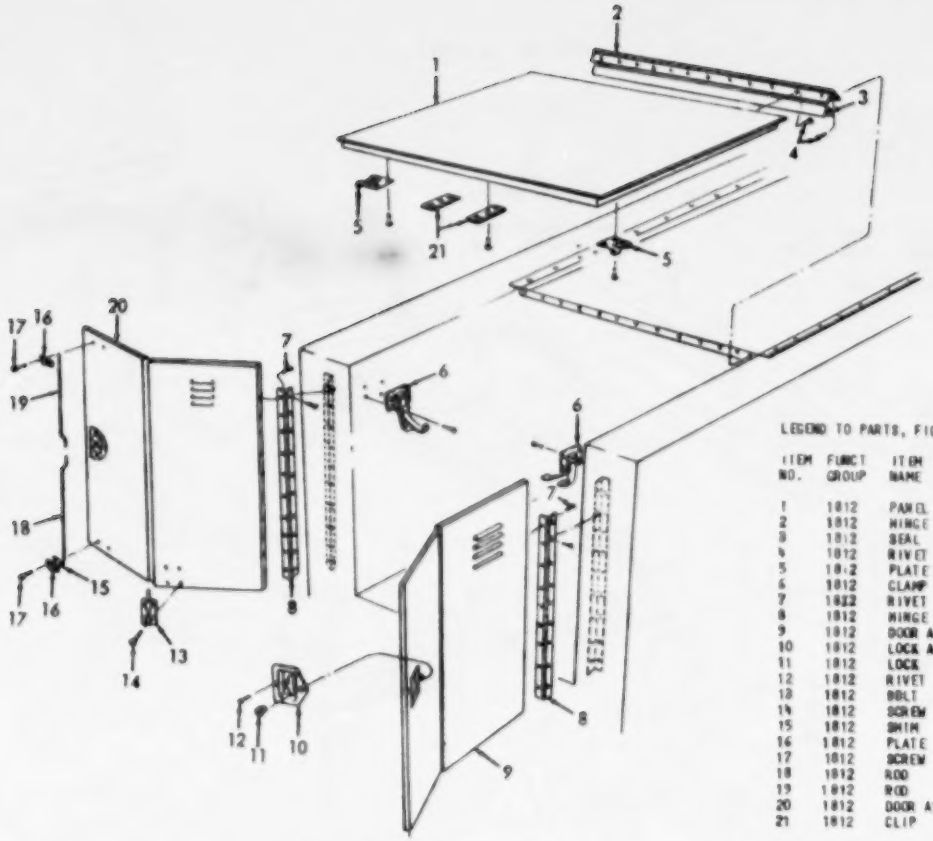

LEGEND TO PARTS, FIGURE 17

ITEM NO.	FUNCT GROUP	ITEM NAME
1	1812	PANEL AY
2	1812	HINGE
3	1812	SEAL
4	1812	RIVET
5	1812	PLATE
6	1812	CLAMP
7	1822	RIVET
8	1812	HINGE
9	1812	DOOR AY
10	1812	LOCK AY
11	1812	LOCK
12	1812	RIVET
13	1812	BOLT
14	1812	SCREW
15	1812	SHIM
16	1812	PLATE
17	1812	SCREW
18	1812	ROD
19	1812	ROD
20	1812	DOOR AY
21	1812	CLIP

Figure No. 17 Rear Doors And Roof Panel

ME 4940-208-25P/17

LEGEND TO PARTS, FIGURE 18

ITEM NO.	FUNCT GROUP	ITEM NAME
1	1812	FLOOR
2	1812	RIVET
3	1812	WHEEL WELL
4	1812	RIVET
5	1812	RIVET
6	1812	NUT
7	1812	SCREW
8	1812	WASHER
9	1812	STOP
10	1812	WASHER
11	1812	NUT
12	1812	CROSSMEMBER
13	1812	CHANNEL
14	1812	CHANNEL
15	2004	RIVET
16	2004	RAIL
17	2004	MEMBER
18	2004	RAIL
19	2004	MEMBER
20	1812	CROSSMEMBER
21	1812	CROSSMEMBER
22	1812	CROSSMEMBER
23	1812	STOP

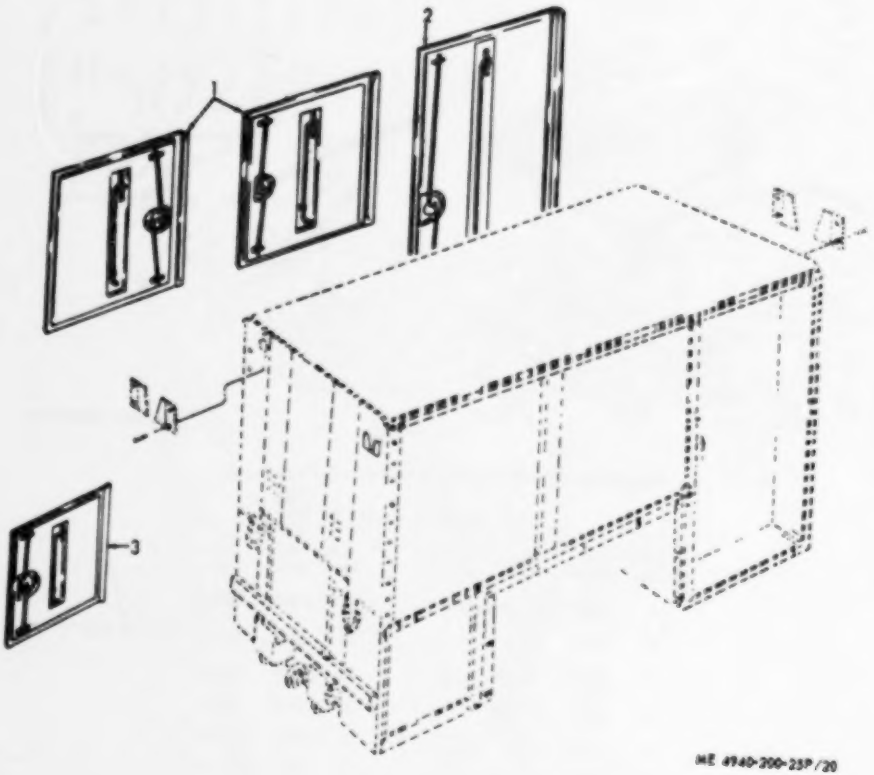

ME 4940-200-25P/20

Figure No. 20 Doors

LEGEND TO PARTS, FIGURE 20

ITEM NO.	FUNCT GROUP	ITEM NAME
1	1812	DOOR AY
2	1812	DOOR AY
3	1812	DOOR AY

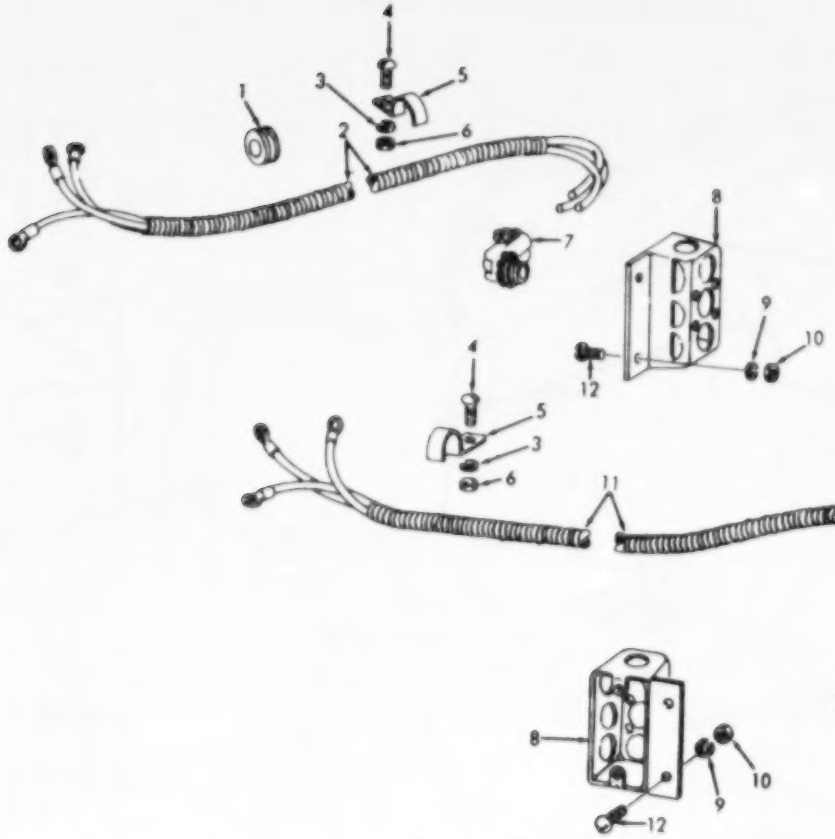

LEGEND TO PARTS, FIGURE 22

ITEM NO.	FUNCT GROUP	ITEM NAME
1	1812	GROMMET
2	1812	WIRING HARNESS
3	1812	WASHER
4	1812	SCREW
5	1812	STRAP
6	1812	NUT
7	1812	CONNECTOR
8	1812	BOX
9	1812	WASHER
10	1812	NUT
11	1812	WIRING HARNESS
12	1812	SCREW

ME 4940-200-25P/22

Figure No. 22 Body Wiring

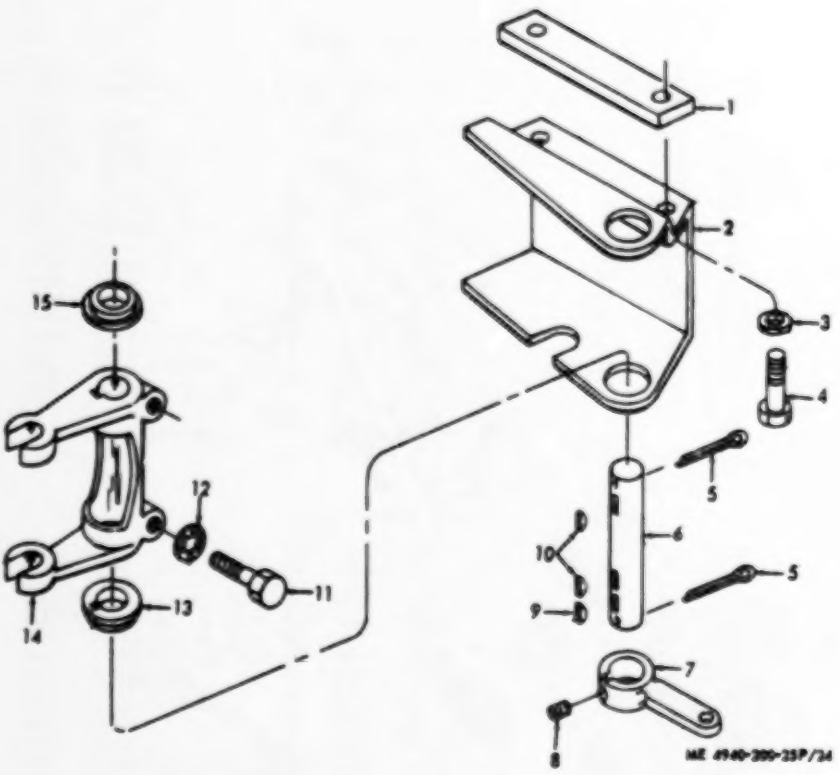

Figure No. 24 Linkage Bracket

LEGEND TO PARTS, FIGURE 24

ITEM NO.	FURCT GROUP	ITEM NAME
1	200A	PLATE
2	200A	BRACKET
3	200A	WASHER
4	200A	SCREW
5	200A	PIN
6	200A	SHAFT
7	200A	ARM
8	200A	SETSCREW
9	200A	KEY
10	200A	KEY
11	200A	SCREW
12	200A	WASHER
13	200A	BUSHING
14	200A	YOKE
15	200A	BUSHING

LEGEND TO PARTS, FIGURE 25

ITEM NO.	FUNCT GROUP	ITEM NAME
1	4408	BLOCK
2	4408	BLOCK
3	4408	WASHER
4	4408	NUT
5	4408	PLATE
6	4408	LUG AY
7	4408	SETSCREW
8	4408	BOLT
9	4408	WASHER
10	4408	SCREW
11	4408	SCREW
12	4405	HOUSING
13	4408	CLAMP
14	4403	SCREW
15	4402	SCREW
16	4403	SCREW
17	4403	SPACER
18	4403	NUT
19	4403	SPACER
20	4403	PLATE-GUIDE
21	4403	WASHER
22	4403	NUT
23	4403	WASHER
24	4403	SPRING
25	4403	ARM
26	4403	BUSHING
27	4403	SCREW
28	4402	COIL AY
29	4402	WINDING
30	4402	INSULATOR
31	4402	STRIP
32	4402	PLUG
33	4402	WRAPPER
34	4402	PLUG
35	4402	POLE PIECE
36	4402	WRAPPER
37	4402	COIL
38	4402	COIL
39	4405	BUSHING
40	4408	WASHER
41	4408	STRIP
42	4403	SCREW
43	4403	RING
44	4403	LEAD
45	4402	COIL
46	4402	COIL AY

LEGEND TO PARTS, FIGURE 26

ITEM NO.	FUNCT GROUP	ITEM NAME
1	4401	WINDING
2	4401	INSULATOR
3	4401	POLE PIECE
4	4408	SETSCREW
5	4405	HOUSING
6	4408	STRIP
7	4408	SCREW
8	4408	WASHER
9	4408	BLOCK
10	4408	WASHER
11	4408	NUT
12	4408	NUT
13	4408	WASHER
14	4408	WASHER
15	4408	WASHER
16	4408	WASHER
17	4408	SCREW
18	4405	INSULATOR
19	4405	SCREW
20	4401	SCREW
21	4403	WASHER
22	4403	SCREW
23	4403	WASHER
24	4403	SPRING
25	4403	ARM
26	4403	BUSHING
27	4403	SCREW
28	4403	SCREW
29	4403	STATOR
30	4403	SCREW
31	4403	WASHER
32	4403	WASHER
33	4403	WASHER
34	4403	WASHER
35	4403	HOLDER AY
36	4403	RING
37	4403	INSULATOR
38	4403	HOLDER AY
39	4403	BEARING
40	4403	RING
41	4403	BEARING
42	4403	BEARING
43	4403	BEARING
44	4403	NUT
45	4403	SPRING
46	4403	ARM AY
47	4403	SCREW
48	4403	RING
49	4403	INSULATOR

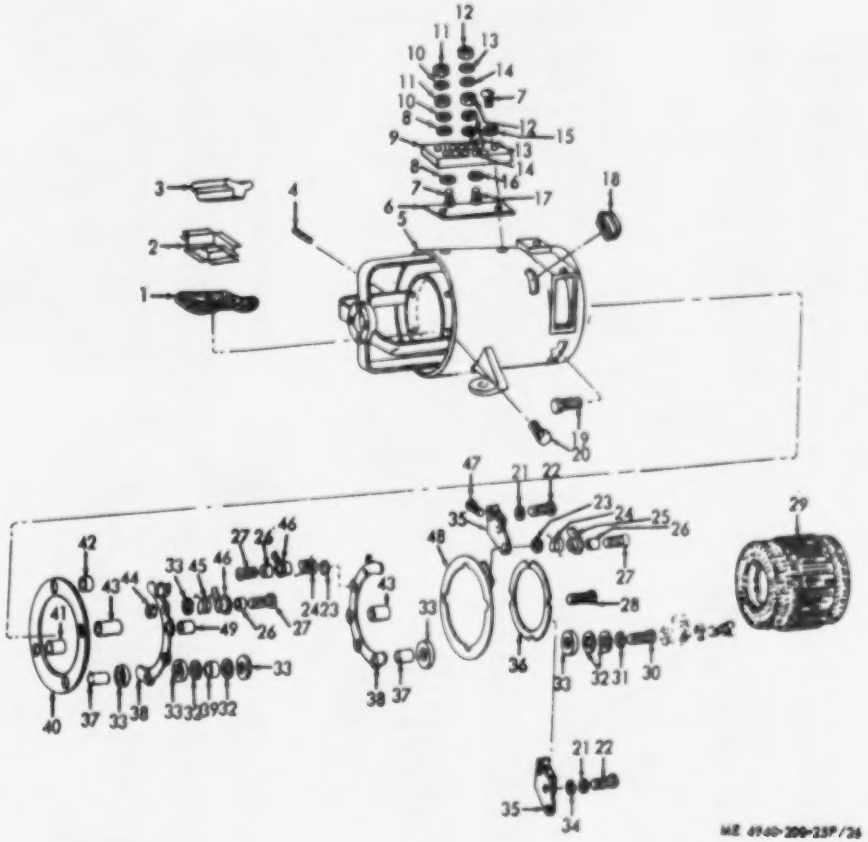

Figure No. 26 Exciter Field, Brush Holder And Terminal Block

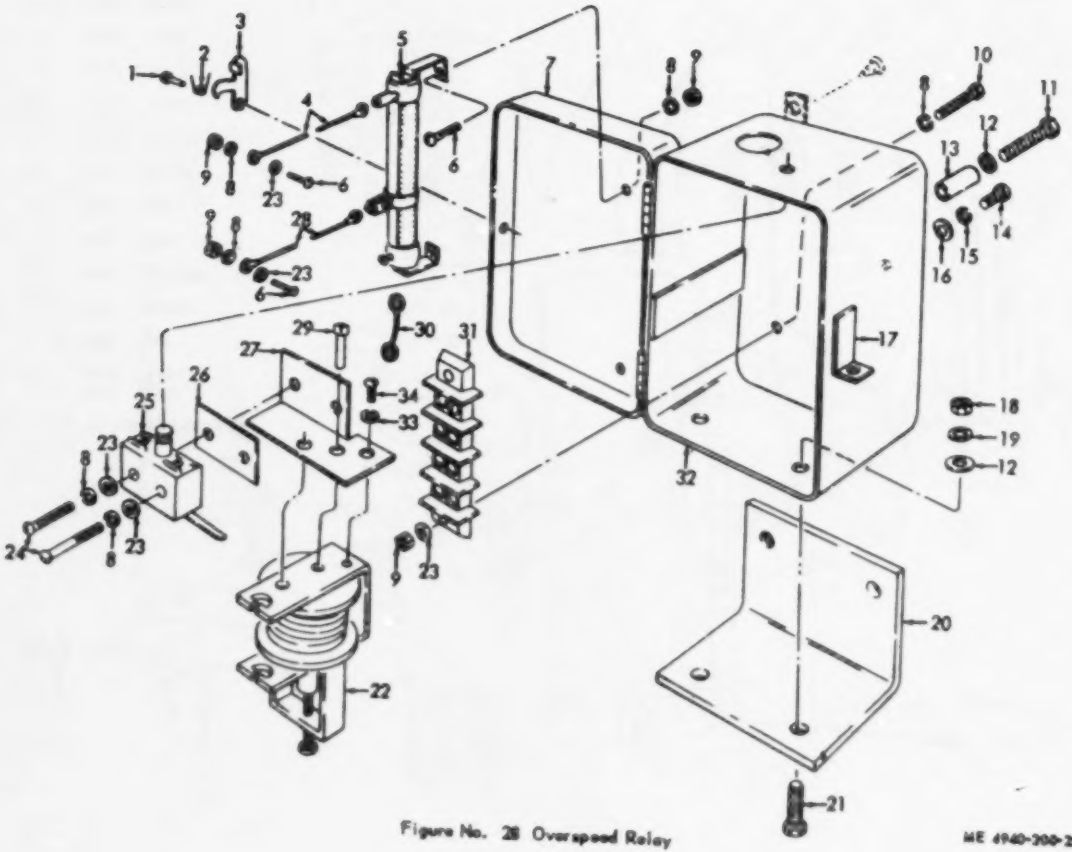

Figure No. 28 Overspeed Relay

ME 4940-200-25P/28

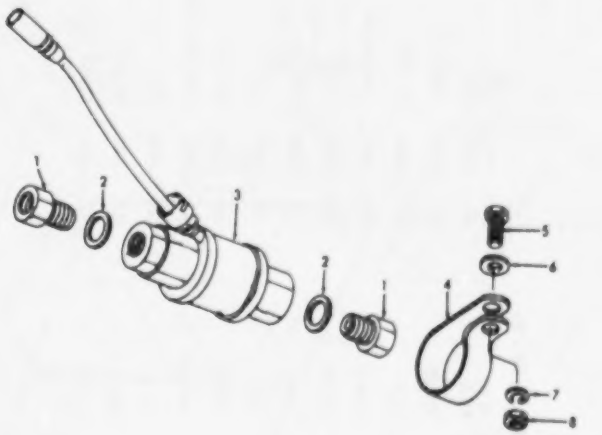

ME 4940-200-23P/29

Figure No. 29 Brake Lock And Clamp

LEGEND TO PARTS, FIGURE 29

ITEM NO.	FUNCT GROUP	ITEM NAME
1	0608	ADAPTER
2	0608	WASHER
3	0608	LOCK AY
4	0608	CLAMP
5	0608	SCREW
6	0608	WASHER
7	0608	WASHER
8	0608	NUT

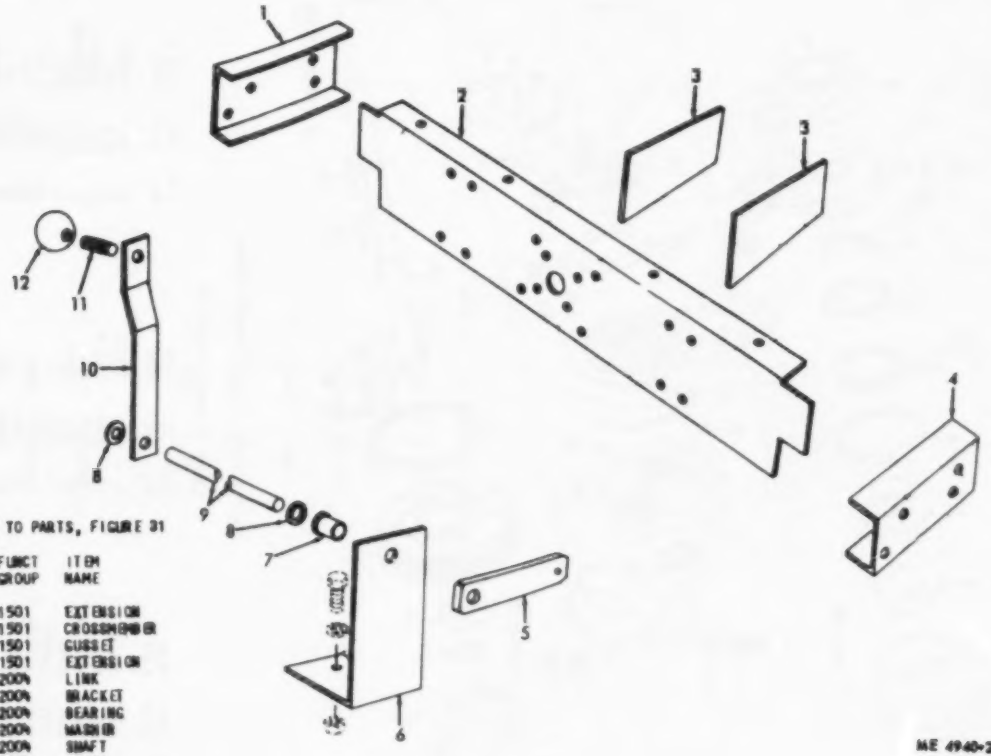

LEGEND TO PARTS, FIGURE 31

ITEM NO.	FUNCT GROUP	ITEM NAME
1	1501	EXTENSION
2	1501	CROSSMEMBER
3	1501	GUSSET
4	1501	EXTENSION
5	200A	LINK
6	200A	BRACKET
7	200A	BEARING
8	200A	WASHER
9	200A	SHAFT
10	200A	LEVER
11	200A	STUD
12	200A	KNOB

ME 4940-200-25P/31

Figure No. 31 Upper Linkage & Frame Extension

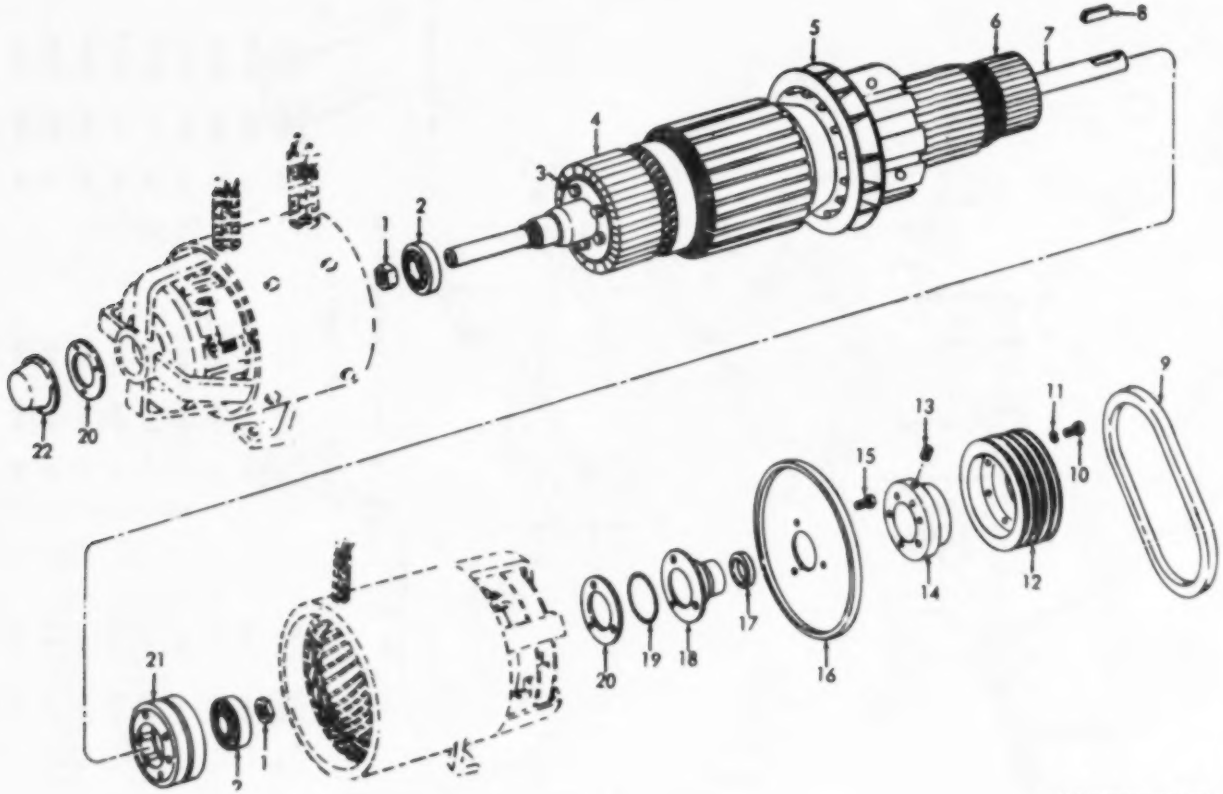

Figure No. 33 Armature

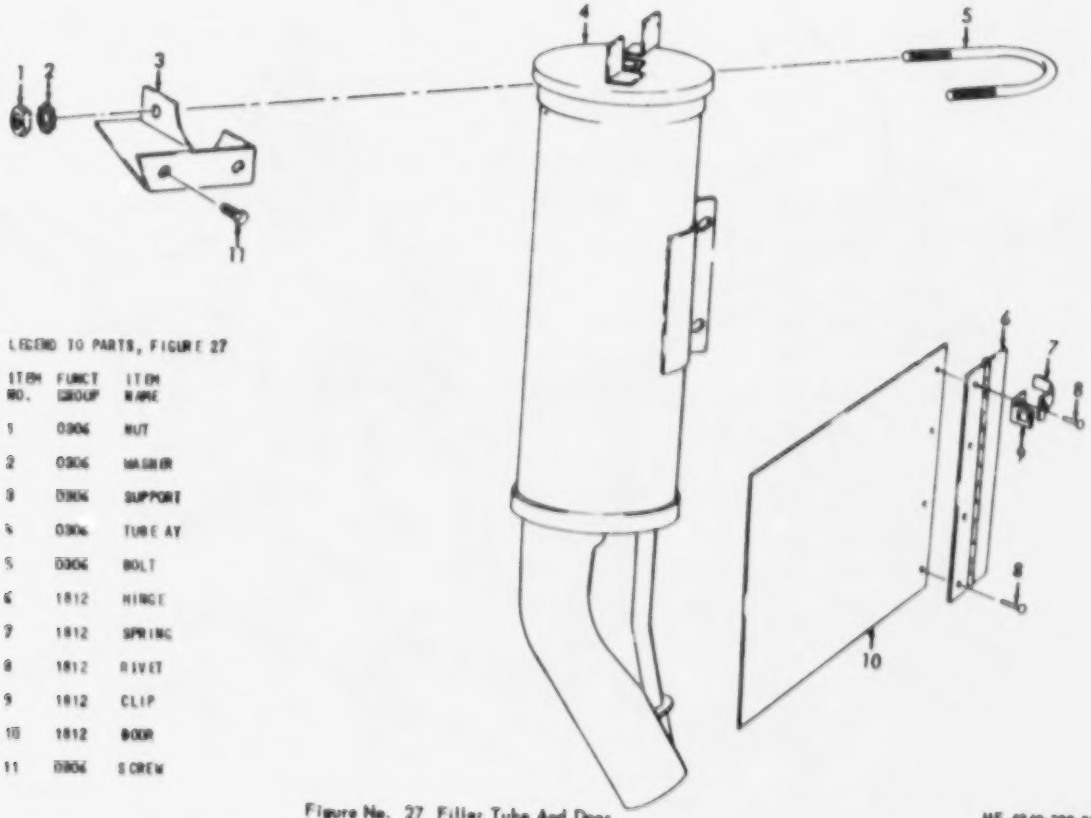

LEGEND TO PARTS, FIGURE 27

ITEM NO.	FUNCT GROUP	ITEM NAME
1	0306	NUT
2	0306	WASHER
3	0306	SUPPORT
4	0306	TUBE AY
5	0306	BOLT
6	1812	HINGE
7	1812	SPRING
8	1812	RIVET
9	1812	CLIP
10	1812	DOOR
11	0306	SCREW

Figure No. 27 Filler Tube And Door

ME 4940-200-25P/27

LEGEND TO PARTS, FIGURE 28

ITEM NO.	FUNCT GROUP	ITEM NAME
1	0606	PIN
2	0606	SPRING
3	0606	LATCH
4	0606	LEAD AY
5	9911	RESISTOR
6	9911	SCREW
7	0606	LID
8	0606	WASHER
9	9911	WASHER
9	9911	NUT
10	0606	SCREW
13	0606	SPACER
14	0606	BOLT
15	0606	WASHER
16	0606	WASHER
17	0606	CATCH
18	0606	NUT
19	0606	WASHER
20	0606	BRACKET
21	0606	SCREW
22	0606	RELAY
23	0606	WASHER
24	0606	SCREW
25	0606	SWITCH
26	0606	INSULATION
27	0606	PLATE
28	0606	LEAD AY
29	0606	PLUG
30	0606	LEAD AY
31	0606	TERMINAL BOARD
32	0606	BOX
33	0606	WASHER
34	0606	SCREW

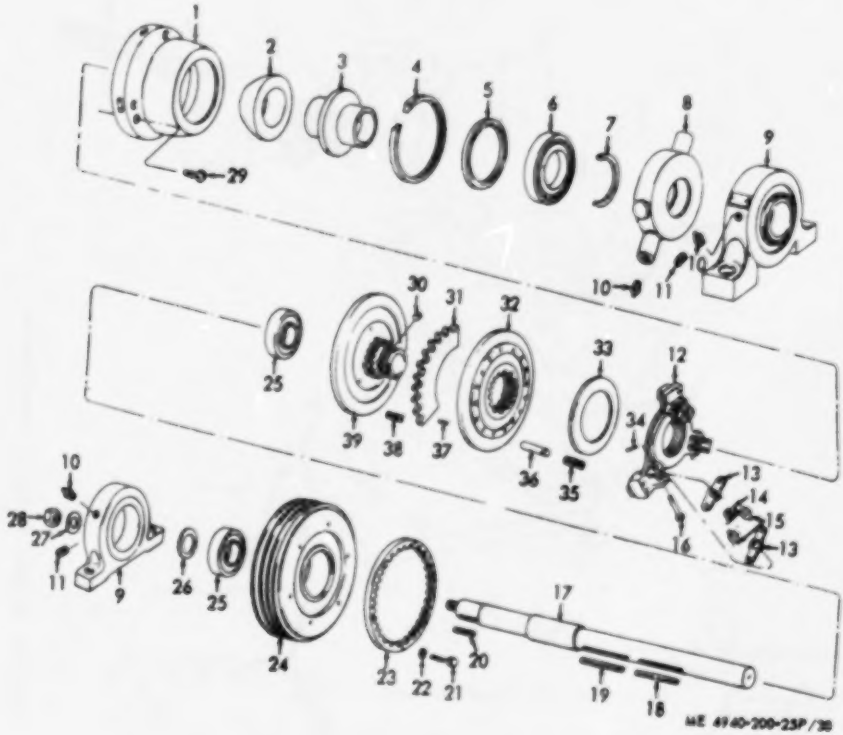

Figure No. 30 Power Take-Off Clutch

LEGEND TO PARTS, FIGURE 30

ITEM NO.	FUNCT GROUP	ITEM NAME
1	200A	COVER
2	200A	RING
3	200A	CONE AY
4	200A	RING
5	200A	WASHER
6	200A	BEARING
7	200A	RING
8	200A	COLLAR
9	200A	BEARING UNIT
10	200A	FITTING
11	200A	SETSCREW
12	200A	YOKE
13	200A	LEVER
14	200A	SPRING
15	200A	ROLLER
16	200A	PIN
17	200A	SHAFT
18	200A	KEY
19	200A	KEY
20	200A	KEY
21	200A	BOLT
22	200A	WASHER
23	200A	GEAR
24	200A	SHEAVE
25	200A	BEARING
26	200A	SPACER
27	200A	WASHER
28	200A	NUT
29	200A	SCREW
30	200A	SETSCREW
31	200A	DISK
32	200A	PLATE
33	200A	DISK
34	200A	PIN
35	200A	SPRING
36	200A	PIN
37	200A	PIN
38	200A	SPRING
39	200A	PLATE

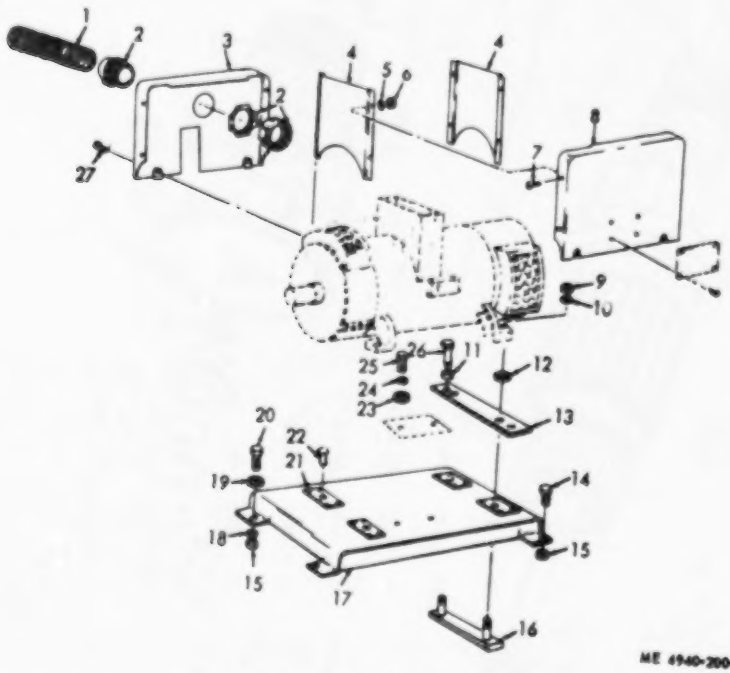

ME 4940-200-25P/32

Figure No. 32 Generator Base & Cover Box

LEGEND TO PARTS, FIGURE 32

ITEM NO.	FURCT GROUP	ITEM NAME
1	9405	CONDUIT
2	9405	CONNECTOR
3	9405	PANEL
4	9405	PANEL
5	9405	WASHER
6	9405	NUT
7	9405	SCREW
8	9405	PANEL
9	9400	NUT
10	9400	WASHER
11	9400	NUT
12	9400	WASHER
13	9400	BAR
14	9400	SCREW
15	9400	NUT
16	9400	BAR
17	9400	BASE AT
18	9400	WASHER
19	2200	WASHER
20	9400	SCREW
21	9400	SHIM
22	9400	RIVET
23	9400	WASHER
24	9400	WASHER
25	9400	SCREW
26	9400	SCREW
27	9405	SCREW

LEGEND TO PARTS, FIGURE 99

ITEM NO.	FUNCT GROUP	ITEM NAME
1	4401	NUT
2	4405	BEARING
3	4401	SCREW
4	4401	COMMUTATOR
5	4406	FAN
6	4401	COMMUTATOR
7	4401	SHAFT
8	4404	KEY
9	4404	BELT
10	4404	BOLT
11	4404	WASHER
12	4404	PULLEY
13	4404	SETSCREW
14	4404	HUB
15	4405	BOLT
16	4405	COVER
17	4405	WASHER
18	4405	CAP
19	4405	SHIM
20	4405	GASKET
21	4401	RING
22	4405	CAP

LEGEND TO PARTS, FIGURE 34

ITEM NO.	FUNCT GROUP	ITEM NAME
1	4406	FILTER
2	4406	WASHER
3	4406	NUT
4	4406	WASHER
5	4406	NUT
6	4406	SCREW
7	4406	GUARD AY
8	4405	COVER
9	4400	WASHER
10	4400	BOLT
11	4414	CAPACITOR
12	4414	WASHER
13	4414	WASHER
14	4414	SCREW
15	4414	LEAD AY
16	4406	WRAPPER AY
17	4406	SCREW
18	4408	BRUSH
19	4408	BRUSH
20	4408	BRUSH
21	4414	LEAD AY
22	4414	SCREW
23	4414	WASHER
24	4414	WASHER
25	4414	CAPACITOR
26	4414	RING
27	4414	WASHER
28	4414	SCREW
29	4405	GUARD
30	4405	BOLT
31	4405	WASHER

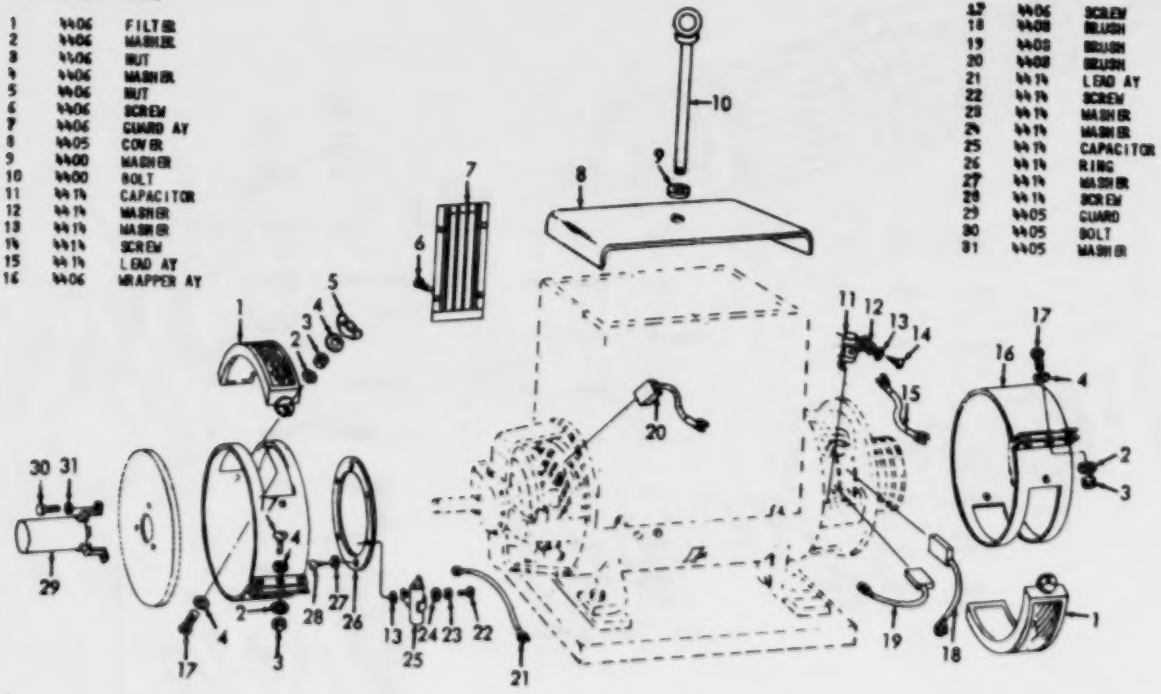

ME 4940-200-25P/34

Figure No. 34 Welder Motor Brushes, Filter And Related Parts

LEGEND TO PARTS, FIGURE 35

ITEM NO.	FUNCT GROUP	ITEM NAME
1	4407	LEAD
2	4407	LEAD
3	4407	LEAD
4	4407	LEAD
5	4407	LEAD
6	4407	LEAD
7	4407	LEAD
8	4407	LEAD
9	4407	NUT
10	4407	WASHER
11	4407	SCREW
12	4407	PANEL
13	4408	NUT
14	4408	WASHER
15	4408	WASHER
16	4408	TERMINAL BOARD
17	4408	SCREW
18	4703	METER
19	4703	SCREW
20	4407	AMMETER
21	4407	SCREW
22	4411	WASHER
23	4411	SCREW
24	4407	STATION
25	4410	SCREW
26	4410	KNOB
27	4410	SCREW
28	4410	WASHER
29	4410	SWITCH
30	4410	SCREW
31	4407	LEAD
32	4407	LEAD
33	4407	WASHER
34	4407	SCREW
35	4411	SCREW

LEGEND TO PARTS, FIGURE 36

ITEM NO.	FUNCT GROUP	ITEM NAME
1	4414	BRACKET
2	4414	NUT
3	4414	CAPACITOR
4	4414	WASHER
5	4414	SCREW
6	4417	RESISTOR
7	4407	WASHER
8	4407	SHIELD
9	4407	INSULATION
10	4407	RIVET
11	4411	SETSCREW
12	4411	ADAPTER
13	4411	SPACER
14	4410	SWITCH
15	4410	SWITCH
16	4407	AMMETER
17	4407	SCREW
18	4407	VOLTMETER
19	4407	METER
20	4407	VOLTMETER
21	4407	SCREW
22	4407	NUT
23	4407	WASHER
24	4408	CONNECTOR
25	4410	SCREW
26	4411	WASHER
27	4411	SCREW
28	4411	SETSCREW
29	4411	HANDWHEEL
30	4407	SCREW
31	4407	COVER
32	4408	SCREW
33	4414	WASHER
34	4408	SCREW
35	4408	INSULATOR
36	4408	BLOCK
37	4408	WASHER
38	4408	WASHER
39	4408	NUT
40	4408	STUD
41	4408	NUT
42	4408	NUT
43	4407	WASHER
44	4408	SCREW
45	4408	INSULATOR
46	4408	BUS BAR
47	4407	SCREW
48	4408	WASHER
49	4407	SHUNT
50	4408	WASHER
51	4408	WASHER
52	4408	WASHER
53	4408	SCREW
54	4408	SCREW
55	4414	CAPACITOR
56	4408	NUT
57	4408	WASHER
58	4407	CONNECTOR
59	4408	CONNECTOR
60	4411	COLLAR
61	4408	WASHER

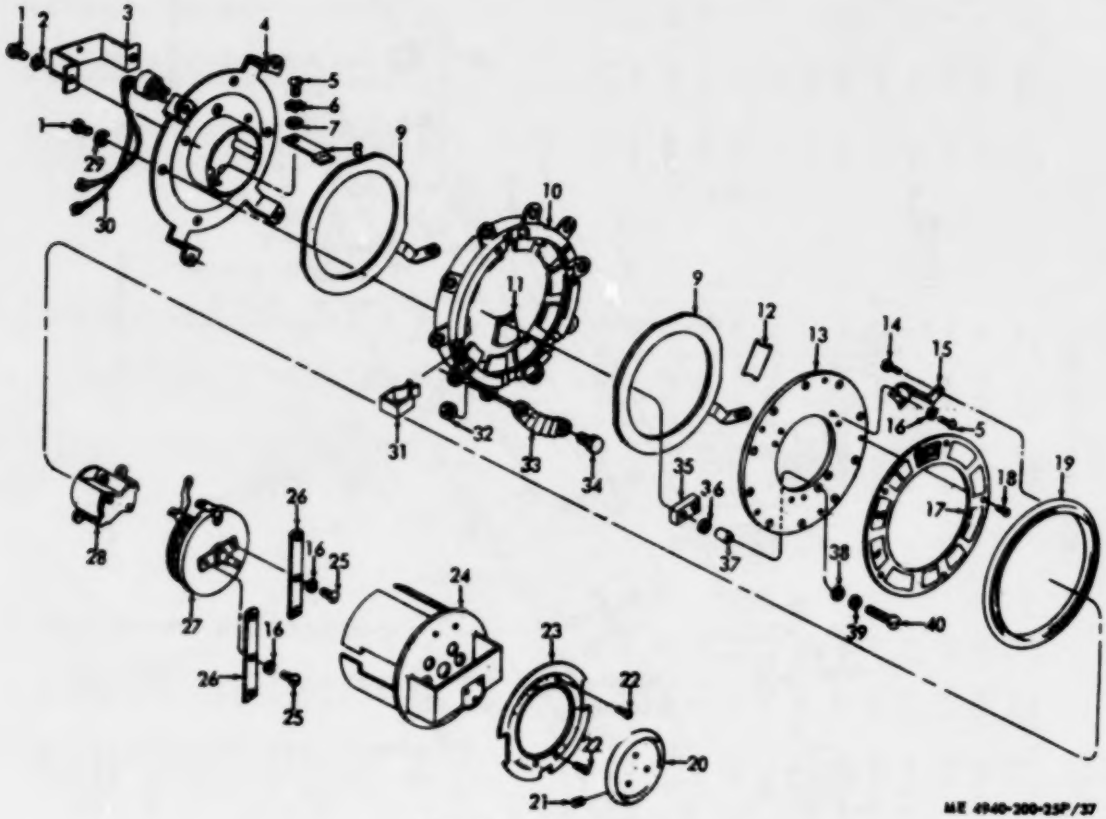

Figure No. 37 Rotary Switch

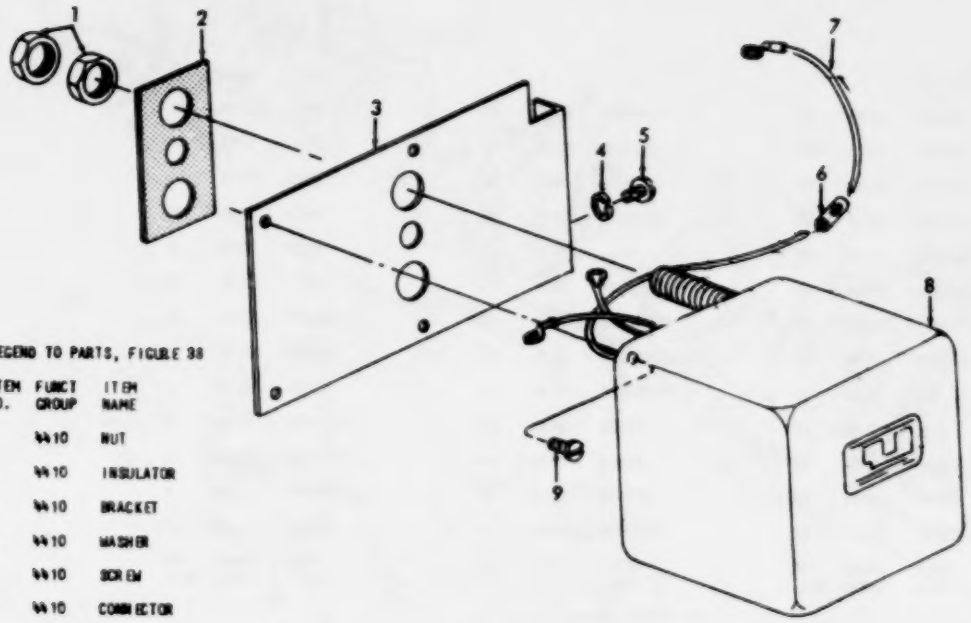

LEGEND TO PARTS, FIGURE 38

ITEM NO.	FUNCT GROUP	ITEM NAME
1	4410	NUT
2	4410	INSULATOR
3	4410	BRACKET
4	4410	WASHER
5	4410	SCREW
6	4410	CONNECTOR
7	4410	LEAD AY
8	4410	RELAY
9	4410	SCREW

ME 4940-200-25P/38

Figure No. 38 Relay

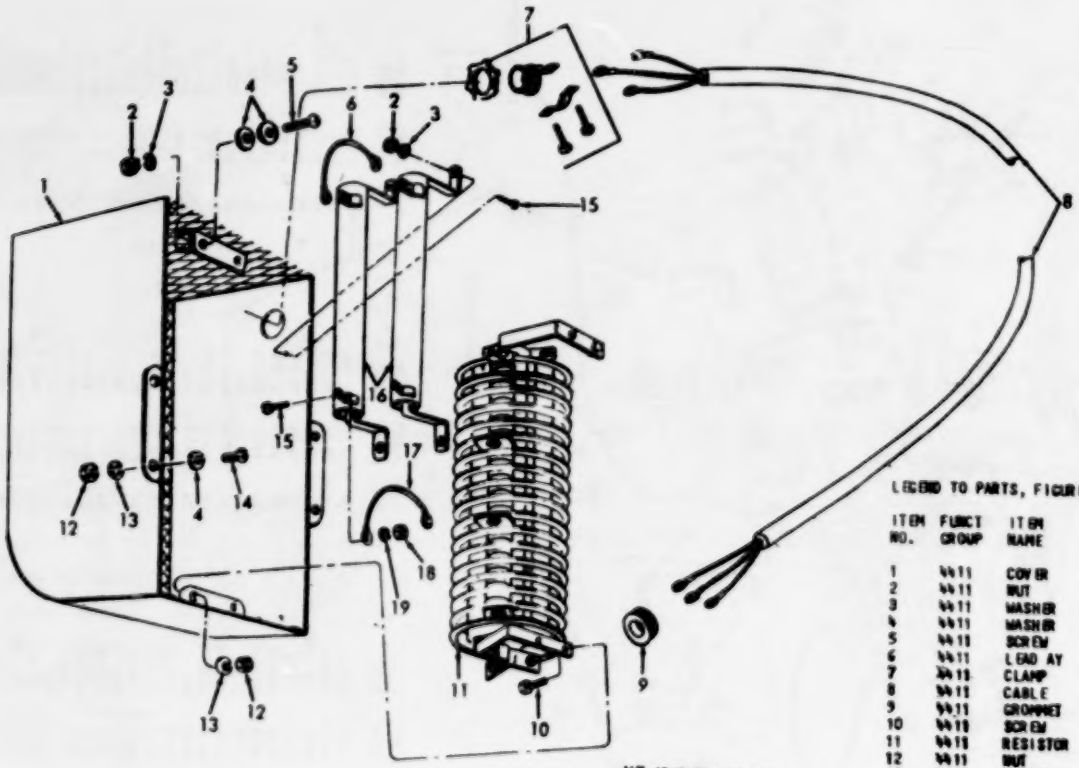

Figure No. 40 Battery Charging Resistory Panel

LEGEND TO PARTS, FIGURE 40

ITEM NO.	FURCT GROUP	ITEM NAME
1	9911	COVER
2	9911	NUT
3	9911	WASHER
4	9911	WASHER
5	9911	SCREW
6	9911	LEAD AY
7	9911	CLAMP
8	9911	CABLE
9	9911	GROMMET
10	9911	SCREW
11	9911	RESISTOR
12	9911	NUT
13	9911	WASHER
14	9911	SCREW
15	9911	SCREW
16	9911	RESISTOR
17	9911	LEAD AY
18	9911	NUT
19	9911	WASHER

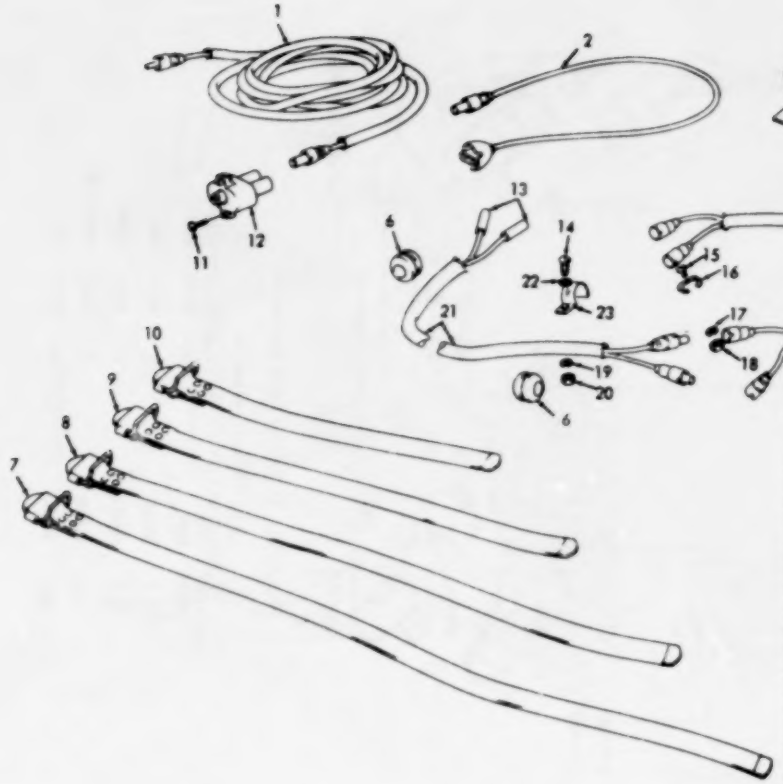

LEGEND TO PARTS, FIGURE 42

ITEM NO.	FUNCT GROUP	ITEM NAME
1	0608	WIRING HARNESS
2	0608	WIRING HARNESS
3	2202	SCREW
4	2202	REFLECTOR
5	0606	WIRING HARNESS
6	0606	GROMMET
7	1812	STRAP
8	1812	STRAP
9	1812	STRAP
10	1812	STRAP
11	0608	SCREW
12	0608	SWITCH
13	0606	CONNECTOR
14	0606	SCREW
19	0608	SCREW
15	0606	SCREW
16	0606	CLIP
17	0606	WASHER
18	0606	NUT
19	0606	WASHER
20	0606	NUT
21	0606	WIRING HARNESS
22	0606	WASHER
22	0608	WASHER
23	0608	CLAMP

MF 4940-300-25P/42

Figure No. 42 Wiring Harness And Tie Down Straps

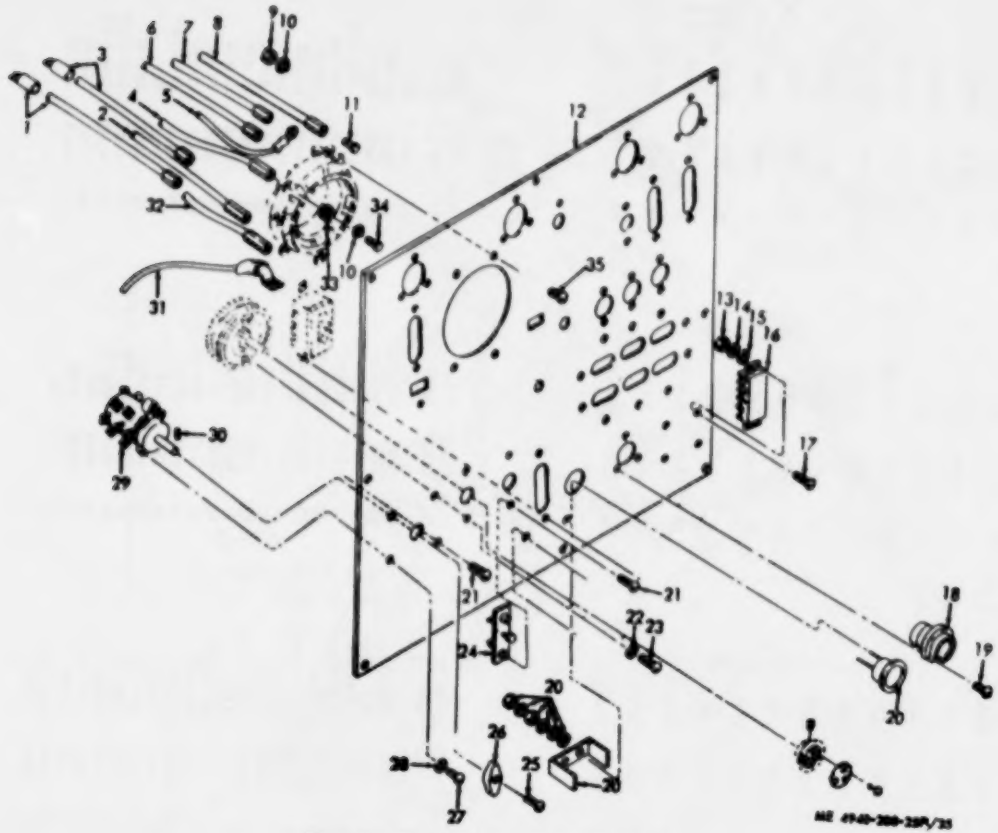

Figure No. 35 Control Panel And Related Parts

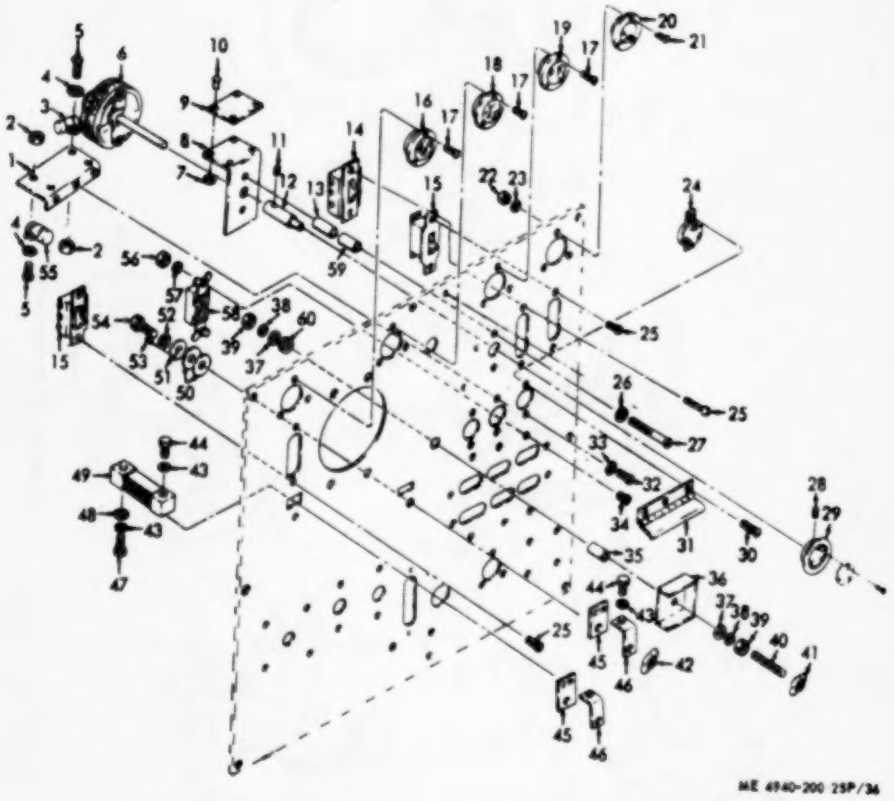

Figure No. 36 Control Panel Components

LEGEND TO PARTS, FIGURE 97

ITEM NO.	FUNCT GROUP	ITEM NAME
1	44-10	SCREW
2	44-10	WASHER
3	44-10	BRACKET
4	44-10	HOUSING
5	44-10	SCREW
6	44-10	WASHER
7	44-10	WASHER
8	44-10	CLIP
9	44-10	RING
10	44-10	RING
11	44-10	CONTACT
12	44-10	PLATE
13	44-10	DISK
14	44-10	SCREW
15	44-10	BRACKET
16	44-10	WASHER
17	44-10	PLATE
18	44-10	SCREW
19	44-10	HANDWHEEL A
20	44-10	HANDWHEEL
21	44-10	SETSCREW
22	44-10	SCREW
23	44-10	DIAL
24	44-10	HOUSING
25	44-10	SCREW
26	44-10	SPRING
27	44-10	RHEOSTAT
28	44-10	CONNECTOR
29	44-10	WASHER
30	44-10	LEAD AY
31	44-10	CLIP
32	44-10	NUT
33	44-10	RESISTANCE
34	44-10	SCREW
35	44-10	CONTACT
36	44-10	WASHER
37	44-10	INSULATOR
38	44-10	WASHER
39	44-10	WASHER
40	44-10	SCREW

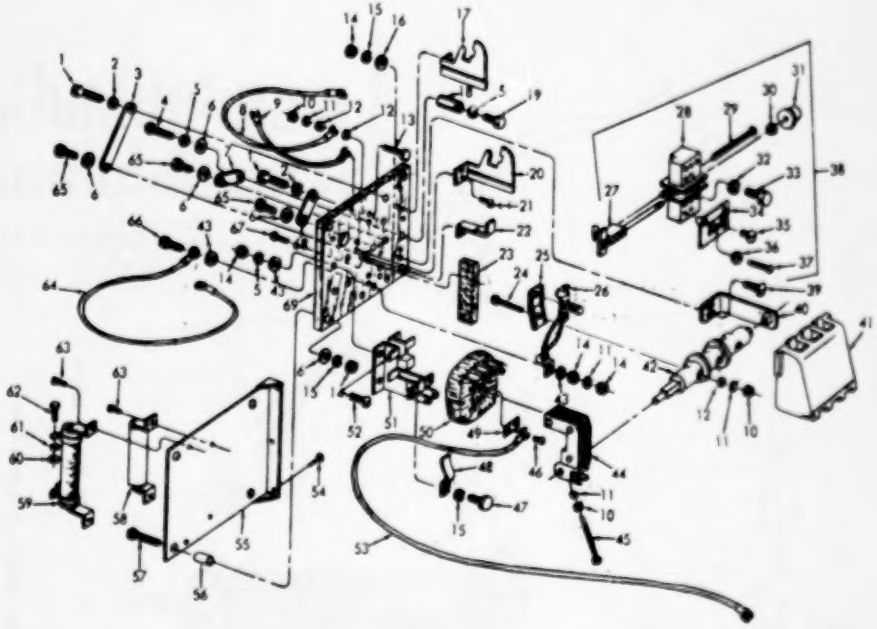

ME 4940-200-25P/39

Figure No. 39 Resistor Switch

LEGEND TO PARTS, FIGURE 39

ITEM NO.	FUNCT GROUP	ITEM NAME
1	44 10	SCREW
2	44 10	WASHER
3	44 10	BUS BAR
4	44 10	SCREW
5	44 10	WASHER
6	44 10	WASHER
7	44 10	LINK
8	44 10	LEAD AY
9	44 10	LEAD AY
10	44 10	NUT
11	44 10	WASHER
12	44 10	WASHER
13	44 10	SCREW
14	44 10	NUT
15	44 10	WASHER
16	44 10	WASHER
17	44 10	HOLDER
18	44 10	NUT
19	44 10	SCREW
20	44 10	HOLDER
21	44 10	SCREW
22	44 10	CONTACT
23	44 10	BAFFLE
24	44 10	SCREW
25	44 10	HOLDER
26	44 10	CONTACT
27	44 10	TRIP
28	44 10	BLOCK
29	44 10	SCREW
30	44 10	NUT
31	44 10	BUTTON
32	44 10	WASHER
33	44 10	BOLT
34	44 10	ELEMENT
35	44 10	SCREW
36	44 10	NUT
37	44 10	SCREW
38	44 10	TRIP AY
39	44 10	SCREW
40	44 10	BRACKET
41	44 10	SHIELD AY
42	44 10	SHAFT AY
43	44 10	WASHER
44	44 10	YOKE
45	44 10	SCREW
46	44 10	SCREW
47	44 10	SCREW
48	44 10	BRACKET
49	44 10	CONNECTOR
50	44 10	COIL
51	44 10	YOKE
52	44 10	SCREW
53	44 10	LEAD AY
54	44 10	SCREW
55	44 10	BRACKET
56	44 10	SPACER
57	44 10	SCREW
58	44 11	RESISTOR
59	44 10	RESISTOR
60	44 11	NUT
61	44 11	WASHER
62	44 11	SCREW
63	44 11	SCREW
64	44 10	LEAD AY
65	44 10	SCREW
66	44 10	SCREW
67	44 10	SCREW
68	44 10	BUS BAR
69	44 10	PANEL

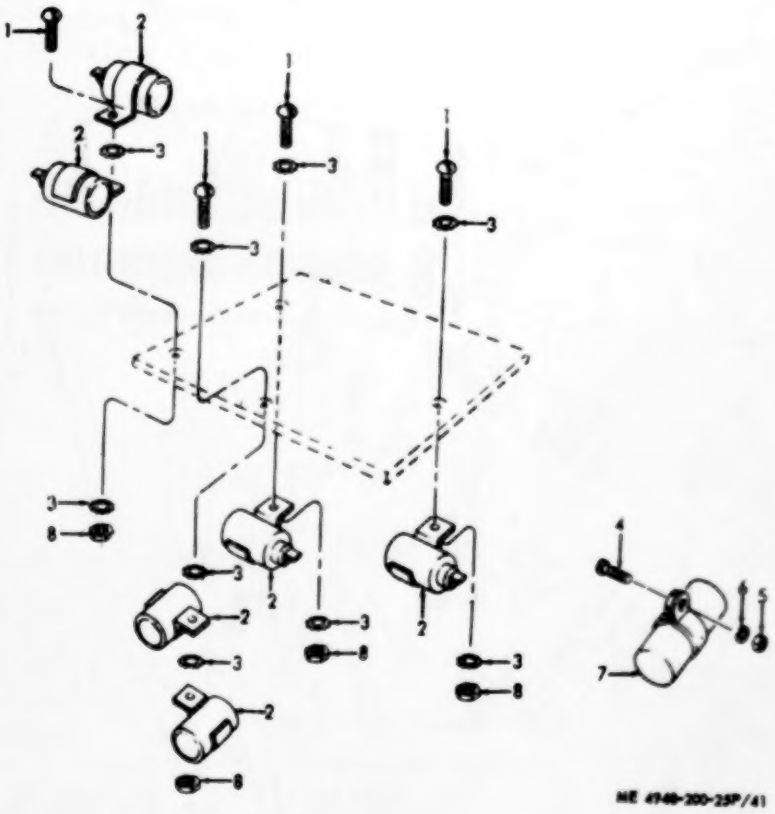

Figure No. 41 Control Panel Capacitors

LEGEND TO PARTS, FIGURE 41

ITEM NO.	FUNCT GROUP	ITEM NAME	ITEM NO.	FUNCT GROUP	ITEM NAME
1	9999	SCREW	5	9999	NUT
2	9999	CAPACITOR	6	9999	MARKER
3	9999	MARKER	7	9999	CAPACITOR
4	9999	SCREW	8	9999	NUT

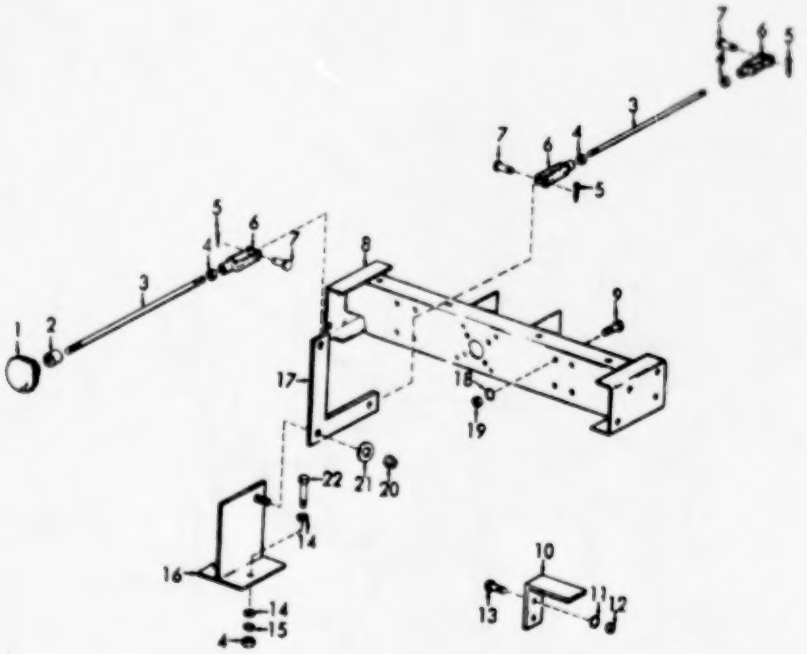

ME 4940-200-23P/43

Figure No. 43 Declutcher Linkage

LEGEND TO PARTS, FIGURE 43

ITEM NO.	FUNCT GROUP	ITEM NAME	ITEM NO.	FUNCT GROUP	ITEM NAME	ITEM NO.	FUNCT GROUP	ITEM NAME
1	2004	KNOB	9	1501	SCREW	16	2004	SUPPORT
2	2204	BUSHING	10	1501	SUPPORT	17	2004	BELLCRANK
3	2004	ROD	11	1501	WASHER	18	1501	WASHER
4	2004	NUT	12	1501	NUT	19	1501	NUT
5	2004	PIN	13	1501	SCREW	20	2004	NUT
6	2004	CLEVIS	14	2004	WASHER	21	2004	WASHER
7	2004	PIN	15	2004	WASHER	22	2004	SCREW
8	1501	REWORK AT						

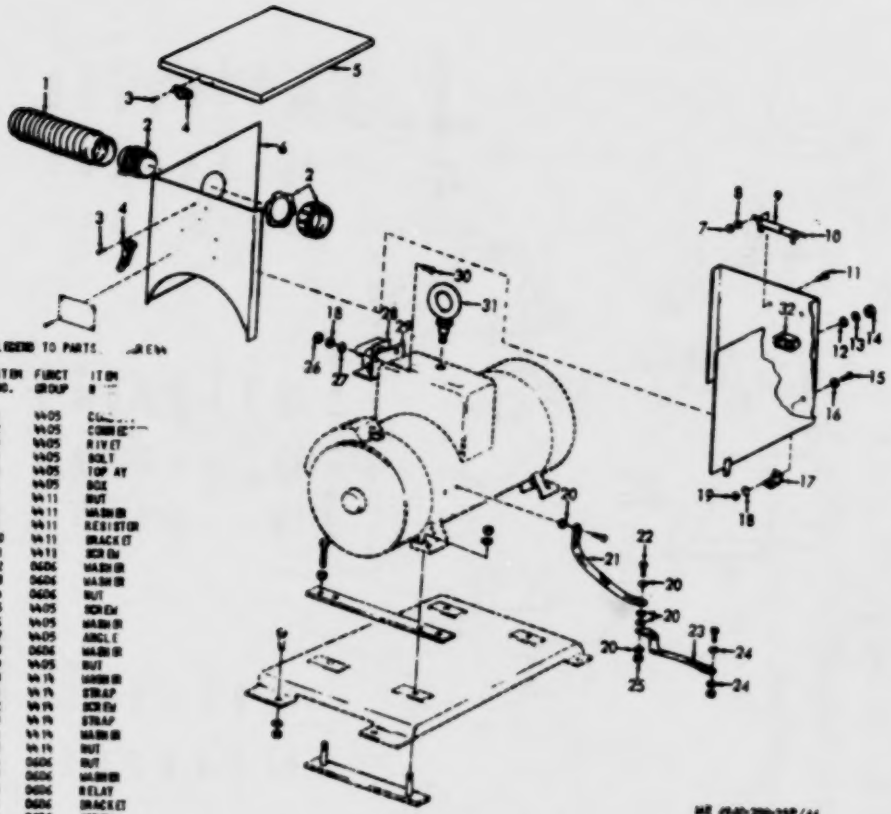

LEGEND TO PARTS ... DRAWN

ITEM NO.	FUNCT GROUP	ITEM
1	9405	CL...
2	9405	CONNEC
3	9405	RIVET
4	9405	BOLT
5	9405	TOP AY
6	9405	BOX
7	9411	NUT
8	9411	WASHER
9	9411	RESISTOR
10	9411	BRACKET
11	9411	SCREW
12	0606	WASHER
13	0606	WASHER
14	0606	NUT
15	9405	SCREW
16	9405	WASHER
17	9405	ANGLE
18	0606	WASHER
19	9405	NUT
20	9411	WASHER
21	9411	STRAP
22	9411	SCREW
23	9411	STRAP
24	9411	WASHER
25	9411	NUT
26	0606	NUT
27	0606	WASHER
28	0606	RELAY
29	0606	BRACKET
30	0606	SCREW
31	9400	BOLT
32	0606	RELAY AY

Figure No. 44 Cover Box

LEGEND TO PARTS, FIGURE 45

ITEM NO.	FUNCT GROUP	ITEM NAME	ITEM NO.	FUNCT GROUP	ITEM NAME
1	4407	CLAMP	21	4407	NUT
2	4407	WASHER	22	4407	NUT
2	4408	WASHER	23	4408	BLOCK
3	4407	WASHER	24	4408	BLOCK
4	4407	NUT	25	4408	BRACKET
4	4408	NUT	26	4404	GUARD
5	4407	WASHER	27	4408	SCREW
6	4407	CLAMP	28	4408	BRACKET
7	4407	NUT	29	4409	FUSE HOLDER
8	4407	WASHER	30	4409	FUSE
9	4407	SCREW	31	4409	FUSE
10	4410	SWITCH	32	4410	SCREW
11	4407	BRACKET	33	4410	WASHER
12	4414	NUT	34	44107	PANEL
13	4407	WASHER	35	4408	SCREW
13	4408	WASHER	36	4703	SCREW
14	4407	WASHER	37	4410	SCREW
15	4407	CLAMP	38	4407	SCREW
16	4407	NUT	39	4414	SCREW
17	4407	WASHER	40	4410	SCREW
18	4407	SCREW	41	4411	WASHER
19	4407	WASHER	42	4410	WASHER
20	4407	WASHER	43	4407	SCREW

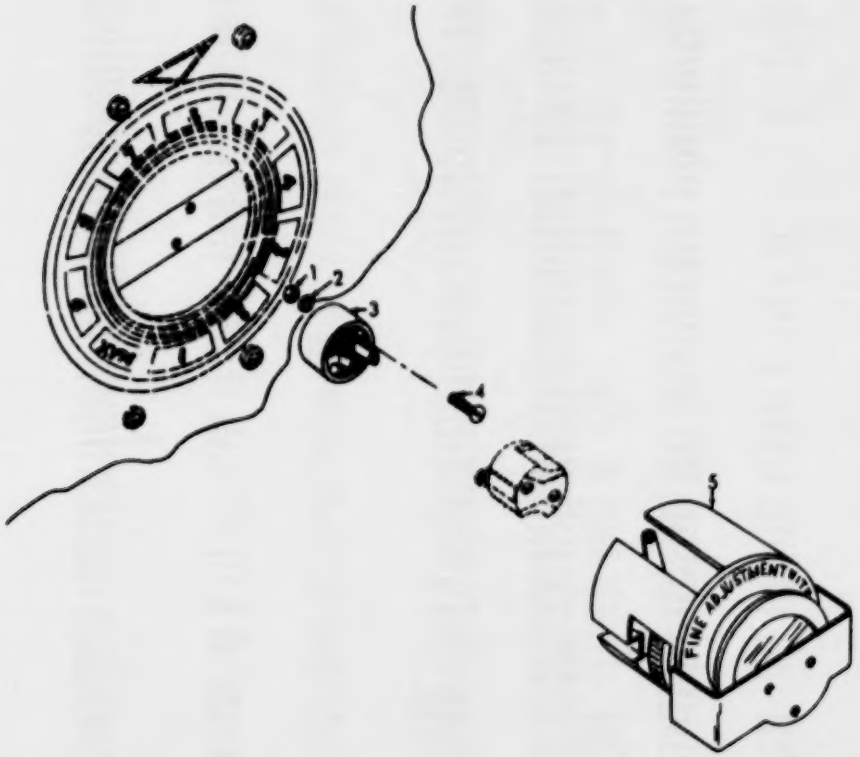

ME 4940-200-35P/46

Figure No. 46 Welder Rheostat And Receptacle

LEGEND TO PARTS, FIGURE 46

ITEM NO.	FUNCT GROUP	ITEM NAME
1	4410	NUT
2	4410	WASHER
3	4410	CONNECTOR
4	4410	SCREW
5	4410	RHEOSTAT AY

Section VII. INDEX-FEDERAL STOCK NUMBER AND REFERENCE NUMBER CROSS-REFERENCE TO INDEX NUMBER

Reference No.	Mfr Code	Index No.	Reference No.	Mfr Code	Index No.
MS20500-428	96906	00744	MS24665-283	96906	00740
MS20600AD-3	96906	00407	MS24665-285	96906	00333
MS20600AD-5	96906	00407	MS24665-353	96906	00339
		00501			00336
		00531			00834
		00611	MS24665-357	96906	00984
		00624	MS24665-360	96906	00663
		00638	MS27183-10	96906	00167
		00704			00271
		00766			00412
MS20659-2	96906	00163			00435
		00166			00576
		00169			00841
MS20659-39	96906	01671			01008
MS20659-4	96906	01272			01282
		01509			01494
		01572	MS27183-11	96906	00215
		01575			01457
		01578			01763
MS21044-N3	96906	01054	MS27183-13	96906	00333
MS21044N8	96906	00920			00436
MS21083N3	96906	00168			00561
		01781	MS27183-14	96906	00333
MS21083N3	96906	00194			00929
MS21318-19	96906	01036			01245
		01349	MS27183-15	96906	00742
		01773			01169
MS21318-27	96906	01092	MS27183-17	96906	00926
MS21333-009	96906	00123	MS27183-18	96906	00842
		00253			00062
MS24617-11	96906	01011			01004
MS24617-15	96906	0137[illegible]	MS27183-21	96906	00250
		01638			00411
MS24617-21	96906	01619			01003
MS24617-5	96906	01308	MS27183-23	96906	01448
MS24621-30	96906	00813	MS27183-24	96906	00913
		01040	MS27183-32	96906	01641
MS24621-43	96906	00940	MS27183-7	96906	00569
MS24621-54	96906	01379			01633
		01552	MS27[illegible]-3-8	96906	00150
MS24621-55	96906	01035			00151
		01043			00244
MS24621-56	96906	01618			01456
MS24627-10	96906	01044			01470
		01071			01516
MS24629-13	96906	01370	MS35045-3	96906	01242
		01549	MS35190-10	96906	00619
MS24629-21	96906	01201	MS35190-8	96906	00127
MS24629-23	96906	01193	MS35190-249	96906	01498
MS24629-33	96906	01168	MS35206-221	96906	01709
MS24629-35	96906	01550	MS35206-225	96906	01352
MS24629-36	96906	00539			01463
		01629	MS35206-226	96906	01607
MS24629-38	96906	00816	MS35206-231	96906	01633
MS24629-39	96906	00172	MS35206-232	96906	00212
		01038			01362
		01039			01365
MS24629-56	96906	00814			01510
		01367	MS35206-237	96906	01637
		01374	MS35206-241	96906	01612
		01360			01780
		01547	MS35206-243	96906	00145
		01548			00147
		01763			01351
MS24629-57	96906	00815			01779
		01830			01768
MS24630-23	96906	01308			01621
MS24637-1	96906	00926	MS35206-245	96906	01355
		01041			01356
		01042			01357
		01371			01907
		01372			01908
		01377			01604
		01849			01763
MS24637-2	96906	01376			01626
		01846	MS35206-246	96906	00106
MS24637-23	96906	01617	MS35206-247	96906	[illegible]
MS24649-26	96906	01369	MS35206-261	96906	[illegible]
MS24665-134	96906	00431			01694
		00574	MS35206-263	96906	01796
MS24665-283	96906	00334			01627
		00337	MS35206-265	96906	01393

Reference No.	Mfg Code	Index No.
MS35206-265	96906	01824
		01825
		01928
MS35206-267	96906	00934
		01466
		01509
		01615
MS35206-271	96906	01611
MS35206-277	96906	01091
		01165
		01545
		01836
		01893
MS35206-279	96906	01238
		01777
MS35206-280	96906	01339
MS35206-281	96906	01756
		01781
MS35206-282	96906	01613
		01614
MS35206-283	96906	01605
MS35206-284	96906	01593
		01597
		01609
MS35206-285	96906	01239
		01893
MS35206-288	96906	01616
MS35206-290	96906	01782
MS35206-291	96906	01384
		01783
MS35207-259	96906	01684
MS35207-261	96906	00148
		00245
MS35207-262	96906	01241
MS35207-263	96906	01240
		01710
MS35207-264	96906	01057
MS35207-267	96906	00144
MS35207-268	96906	00177
MS35214-67	96906	00200
		01380
		01546
MS35225-28	96906	00860
MS35225-34	96906	00200
MS35241-88	96906	00836
		00897
		00810
MS35273-19	96906	00208
		01759
		01781
MS35273-67	96906	01454
MS35273-84	96906	01452
MS35297-114	96906	01482
MS35297-6	96906	00006
MS35297-92	96906	00340
MS35298-111	96906	00863
MS35298-123	96906	00341
MS35298-42	96906	00376
MS35298-86	96906	00298
MS35309-40	96906	01595
MS35335-20	96906	00193
MS35335-21	96906	00192
		00195
		01793
MS35333-22	96906	01471
		01574
		01835
MS35333-23	96906	01170
		01419
		01424
		01430
		01719
		01797
MS35333-25	96906	00867
MS35333-39	96906	01455
MS35335-40	96906	01493
MS35339-17	96906	01413
		01522
MS35339-32	96906	01411
		01836
		01837
MS35337-29	96906	00219

Reference No.	Mfg Code	Index No.
MS35338-941	96906	00179
MS35338-10	96906	01416
MS35338-22	96906	00865
		01410
		01415
		01427
		01490
		01526
MS35338-23	96906	01416
MS35338-24	96906	00194
		00197
		00867
		01038
		01200
		01266
		01780
MS35338-25	96906	00194
		00272
		00419
		00444
		00448
		00449
		00450
		01423
		01703
		01798
		01842
MS35338-26	96906	00195
		01267
		01417
		01472
		01650
MS35338-27	96906	00299
		00356
		01428
		01527
MS35338-28	96906	00327
		00354
		00385
MS35338-29	96906	00415
		01409
		01584
MS35338-3	96906	00207
		00209
		01426
		01431
		01525
		01791
		01796
MS35338-31	96906	00357
		00414
MS35338-32	96906	01090
MS35338-37	96906	01421
		01422
		01425
		01710
		01717
		01720
MS35338-41	96906	01418
		01684
		01704
		01705
		01707
		01792
MS35338-42	96906	01412
		01521
		01788
		01822
		01839
MS35338-43	96906	01693
		01840
MS35338-44	96906	00011
		00199
		00217
		00252
		00843
		00844
		01093
		01172
		01669
		01691
		01701

Section VII. INDEX-FEDERAL STOCK NUMBER AND REFERENCE NUMBER CROSS-REFERENCE TO INDEX NUMBER

Reference No.	Mfg. Code	Index No.	Reference No.	Mfg. Code	Index No.
M535338-44	96906	01764	M535890-831	96906	01541
M535338-46	96906	00251	M535891-402	96906	01523
		00295			01748
		00296			01617
		00338	M535751-19	96906	00827
		00848	M535751-20	96906	00828
		00930	M535751-21	96906	00829
		01091	M535810-34	96906	00922
		01171	M535810-36	96906	00378
		01429	M535812-4	96906	00305
		01440			00917
		01528	M535822-38	96906	00453
M535338-48	96906	00851	M545904-58	96906	01420
M535338-5	96906	01852			01525
		01688			01836
		01702			01841
M535338-51	96906	01089	M545904-60	96906	01248
M535338-6	96906	01408			01709
		01458	M545904-68	96906	01263
		01594			01700
		01598			01844
		01655	M551017-63	96906	00885
		01790	M551021-56	96906	01381
		01795			01788
M535338-62	96906	00108	M551041-51	96906	01205
		00116	M551087-64-4	96906	01196
M535338-7	96906	00218	M551106-65	96906	00946
		01840	M551Y-63-101	96906	01469
M535339-8	96906	00208	M551957-26	96906	01608
M535387-1	96906	01010	M551963-65	96906	01688
M535425-13	96906	01257	M551964-49	96906	01771
		01335	M551964-62	96906	00961
M535425-26	96906	01337	M551967-14	96906	00751
		01506			00853
M535425-4	96906	01338	M551967-2	96906	00136
		01505			00137
M535436-11	96906	00226			00160
M535436-6	96906	00225			00743
		01271			00745
		01743			00746
		01746			00749
M535489-17	96906	00736			00750
		01727			00833
M535490-20	96906	00234			01090
		00509			01255
M535649-102	96906	00519			01256
		00747			01328
		01582			01583
		01588			01732
		01634			01733
		01750	M551967-23	96906	01075
		01814	M551967-8	96906	00748
		01815			01288
M535649-81	96906	01334			01333
		01633			01504
		01749			01674
M535649-82	96906	00133			01818
		00854	M551968-1	96906	00102
		01327			00114
		01331			00268
		01502			00402
		01584	M551968-11	96906	00316
		01728			00332
M535649-81	96906	00195	M551968-13	96906	00404
M535649-82	96906	00132	M551968-14	96906	00241
		00135			00330
		01324			01076
		01326	M551968-2	96906	00998
		01329			01325
		01500			01581
		01730	M551968-20	96906	00331
		01816			00403
M535649-83	96906	01752			01074
M535650-102	96906	00103	M551968-5	96906	00376
		00110	M551968-8	96906	00329
		00113			00919
		00134	M590725-1	96906	01163
		00136	M590725-10	96906	00211
		01234			01346
M535690-402	96906	00005	M590725-107	96906	01343
M535690-424	96906	00193	M590725-109	96906	01344
M535690-825	96906	00315	M590725-111	96906	00659

Reference No.	MFR Code	Index No.	Reference No.	MFR Code	Index No.
MS90725-111	96906	01481	N29764	28835	01753
MS90725-114	96906	01480	N2976A	28835	01588
MS90725-115	96906	01080			01734
MS90725-118	96906	00805	W799V91	28835	01168
MS90725-12	96906	00171	W7VVU92	28835	01167
MS90725-123	96906	01081	W79V113	28835	01185
MS90725-13	96906	01599	W8U84-11	28835	01292
MS90725-140	96906	00368	W8554-7	28835	01390
MS90725-47	96906	00121			01814
MS90725-49	96906	00917	WW7U3-12	28835	01397
		01483	W9917-2	28835	01321
MS90725-3	96906	01800			01847
		01803	X1016-1	77250	00080
MS90725-38	96906	00938	X1080	77260	00026
MS90725-40	96906	01199	X1221	77260	00086
MS90725-9	96906	01347	X1349	77260	00033
		01348	X1425	77260	00025
		01361			00043
		01503	X1531	77260	00079
		01544	X1536	77260	00112
		01755	X1588	77260	00065
MS90725-99	96906	01424	X1675	77260	00084
		01491	X1885	77260	00027
MS90725-97	96906	01433			00061
MS90725-99	96906	00270	X1887	77260	00062
		00409	X1787	77260	00063
MS90725-9	96906	00144	X1843	77260	00090
		00210	X1904	77260	00068
		00802	X1945	77260	00095
		00809			01023
		01779	X2019	77260	00057
MS90725-60	96906	00804	X2054	77260	00051
		01829	X2307	77260	00071
MS90725-63	96906	01239	X2768-9	77260	00048
MS90725-64	96906	00804	X2802	77260	00054
MS90725-65	96906	00137	X2721	77260	00038
		00925	X2998	77260	00039
		01125	X328	77260	00032
MS90725-68	96906	01163	X4223	77260	00059
MS90725-7	96906	01102	X431	77260	00082
		01184	X455	77260	00052
		01002			01017
MS90725-8	96906	00803	X495	77260	00040
MS90726-111	96906	00907	X541	77260	00034
MS90726-113	96906	00408			01030
MS90726-115	96906	01002	X692	77260	00028
MS90726-13	96906	01003	X890-4	77260	00067
MS90726-162	96906	00407	X923	77260	00042
MS90726-168	96906	01078	X977	77260	00049
MS90726-170	96906	01079	0561	44655	00142
MS90726-230	96906	00365			01736
MS90726-98	96906	00298	0963	44655	01774
		00291	10J229	28835	01296
MS90726-9	96906	00269			01473
		00408	10J228	28835	01296
MS90726-62	96906	00883			01475
		00088	100009	04009	01395
		00265			01715
		00390	102-21	74828	00759
MS90726-64	96906	00369	10302	99730	00696
MS90726-65	96906	01082	109	61208	00968
MS90726-8	96906	00104	11C	76265	01048
MS90726-66	96906	00347	11014	18604	00306
M1927A	61208	00955	116288	24617	01260
M1950F	61208	00962	118823	63009	00908
M20J3F	61208	00960	12C884	28835	01819
M2038A6	61208	00962	12CW76A	28835	01177
M219	61208	00960	12CW962	28835	01188
MP22	57468	00935	120C8	61208	00967
MW1471	28835	01117	1203e1	00000	01468
P08	98255	01034	120994	00000	01398
PR3M3	77342	00141	1222-07	76189	01843
P10e	57468	00978	1234	61208	00388
R3331	28835	03104	128840	00000	00419
SM1236	77260	00072	1320U10903	97403	00096
SM1950	77260	00073	1320U10904	97403	00098
SP129	24447	01226	1320U10905	97403	00105
SP1W8	24447	01225	1320U10906	97403	00097
ST9316	93763	01223	1320U10907	97403	00099
3442-6	75376	00313	1320U10908	97403	00100
590725-6	96906	17579	1320U10909	97403	00101
W1934	28835	01122	1320U10911	97403	00016

Section VII. INDEX-FEDERAL STOCK NUMBER AND REFERENCE NUMBER CROSS-REFERENCE TO INDEX NUMBER

Reference No.	Mfg. Code	Index No.	Reference No.	Mfg. Code	Index No.
1 32UU8U9914	97403	00019	1 32UU8U9984	97403	00327
		00019	1 32UU8U9N01	97403	00394
1 32UU8U9915	97403	00017	1 32UU8U9U02-1	97403	00399
1 32UU8U9916	97403	00116	1 32UU8U9U02-2	97403	00400
1 32UU8U9917	97403	00117	1 32UU8U9U03	97403	00478
1 32UU8U9918	97403	00274			00615
1 32UU8U9919	97403	01007	1 32UU8U9U04	97403	00398
		01213	1 32UU8U9U05	97403	00401
1 32UU8U9920	97403	01214	1 32UU8U9U06-1	97403	00266
1 32UU8U9921	97403	00900			00395
1 32UU8U9922	97403	00904	1 32UU8U9U06-2	97403	00765
1 32UU8U9923	97403	00905			00396
1 32UU8U9924	97403	00902	1 32UU8U9U07	97403	00267
1 32UU8U9925	97403	00912			00397
1 32UU8U9926	97403	00911	1 32UU8U9U08	97403	00691
1 32UU8U9927	97403	00878	1 32UU8U9U10	97403	00729
1 32UU8U9928	97403	00878	1 32UU8U9U11	97403	00410
1 32UU8U9929	97403	00880	1 32UU8U9U19	97403	00486
1 32UU8U9930	97403	00879			00623
1 32UU8U9931	97403	00380	1 32UU8U9U17-1	97403	00590
1 32UU8U9932	97403	00381	1 32UU8U9U17-2	97403	00445
1 32UU8U9933	97403	00382	1 32UU8U9U18	97403	00715
1 32UU8U9934	97403	00349	1 32UU8U9U19	97403	00429
1 32UU8U9935	97403	00319			00572
1 32UU8U9936	97403	00311	1 32UU8U9U20	97403	00483
1 32UU8U9937	97403	00314	1 32UU8U9U27	97403	00776
1 32UU8U9938	97403	00325	1 32UU8U9U29	97403	00278
1 32UU8U9939	97403	00824	1 32UU8U9U30	97403	00297
1 32UU8U9941	97403	01063			00366
1 32UU8U9942	97403	01000			00709
1 32UU8U9943	97403	01001	1 32UU8U9U31	97403	00931
1 32UU8U9944	97403	01062	1 32UU8U9U31-7	97403	00989
1 32UU8U9945	97403	01003	1 32UU8U9U31-8	97403	01001
1 32UU8U9946	97403	00341	1 32UU8U9U33	97403	00418
1 32UU8U9947	97403	01024	1 32UU8U9U34	97403	00571
1 32UU8U9948	97403	00328	1 32UU8U9U35	97403	00570
1 32UU8U9950	97403	00343			00895
		00924	1 32UU8U9U36	97403	00439
1 32UU8U9951	97403	00302			00830
		00919	1 32UU8U9U42	97403	00782
1 32UU8U9953	97403	00101	1 32UU8U9U47	97403	00445
1 32UU8U9954	98926	00139	1 32UU8U9U48	97403	00447
1 32UU8U9955	97403	00138	1 32UU8U9U49	97403	00448
1 32UU8U9956	97403	00220	1 32UU8U9U50	97403	00446
1 32UU8U9957	97403	00142	1 32UU8U9U51	97403	00673
1 32UU8U9958	97403	00213	1 32UU8U9U61	97403	00589
1 32UU8U9959	97403	00303	1 32UU8U9U64-1	97403	00492
1 32UU8U9960	97403	00372			00629
1 32UU8U9961	97403	01021	1 32UU8U9U64-2	97403	00438
1 32UU8U9962	97403	00929			00601
		01022	1 32UU8U9U65-1	97403	00494
1 32UU8U9963	97403	00929			00631
		01027	1 32UU8U9U65-2	97403	00490
1 32UU8U9964	97403	00304			00617
1 32UU8U9965	97403	00301	1 32UU8U9U65-3	97403	00460
1 32UU8U9967	97403	00989			00603
1 32UU8U9968	97403	00891	1 32UU8U9U65-4	97403	00703
1 32UU8U9969	97403	00890	1 32UU8U9U66	97403	00462
1 32UU8U9970	97403	00842			00462
1 32UU8U9971	97403	00899			00496
1 32UU8U9972	97403	00277			00605
1 32UU8U9973	97403	00866			00619
1 32UU8U9974	97403	00243			00633
1 32UU8U9975	97403	00298			00704
1 32UU8U9976-1	97403	01275	1 32UU8U9U67-1	97403	00464
1 32UU8U9976-2	97403	01277			00484
1 32UU8U9976-3	97403	01280			00498
1 32UU8U9976-4	97403	01281			00607
1 32UU8U9976-5	97403	01279			00621
1 32UU8U9976-6	97403	01278			00635
1 32UU8U9976-7	97403	01274			00706
1 32UU8U9976-8	97403	01276			00981
1 32UU8U9979-2	97403	01239	1 32UU8U9U67-2	97403	00705
1 32UU8U9980-1	97403	01266			00855
1 32UU8U9980-2	97403	01262	1 32UU8U9U69-1	97403	00497
1 32UU8U9980-3	97403	01263			00634
1 32UU8U9980-4	97403	01264			00707
1 32UU8U9980-5	97403	01267	1 32UU8U9U69-2	97403	00463
1 32UU8U9982	97403	01240			00606
1 32UU8U9986	97403	00826	1 32UU8U9U69-3	97403	00708
		00870	1 32UU8U9U70-1	97403	00505
1 32UU8U9987	97403	00869			00637

Section VII. INDEX-FEDERAL STOCK NUMBER AND REFERENCE NUMBER CROSS-REFERENCE TO INDEX NUMBER

Reference No.	Mfg. Code	Index No.
1 32U0E907U-3	97403	00446
1 32U0E907J-1	97403	00809 00499
1 32U0E907J-2	97403	00838 00489
1 32U0E907J-3	97403	00822 00489
1 32U0E907Z-1	97403	00808 00504
1 32U0E907Z-2	97403	00841 00505
1 32U0E907Z-3	97403	00842 00490
1 32U0E907Z-4	97403	00827 00491
1 32U0E907Z-5	97403	00848 00470
1 32U0E907Z-6	97403	00813 00471
1 32U0E907J-1	97403	00814 00493
1 32U0E907J-2	97403	00830 00479
1 32U0E907J-3	97403	00816 00459
1 32U0E907J-4	97403	00802 00599
1 32U0E907J-5	97403	00792
1 32U0E907J-6	97403	00766
1 32U0E907U	97403	00403 00820
1 32U0E907J	97403	00430 00575
1 32U0E907G	97403	00432 00575
1 32U0E907T	97403	00434 00577
1 32U0E907U	97403	00433 00576
1 32U0E907J-1	97403	00837 00580
1 32U0E907J-2	97403	00436 00579
1 32U0E907U	97403	00864
1 32U0E907Z	97403	00563 00804
1 32U0E907Z-2	97403	00589
1 32U0E907Z-1	97403	00862
1 32U0E907Z-2	97403	00518
1 32U0E907J	97403	00865
1 32U0E907J	97403	00506 00443
1 32U0E907J	97403	00880
1 32U0E907J-1	97403	00559
1 32U0E907J-2	97403	00881
1 32U0E907J-3	97403	00560
1 32U0E907J-1	97403	00444
1 32U0E907J-2	97403	00591
1 32U0E907J-1	97403	00568 00492
1 32U0E907J-2	97403	00566 00493
1 32U0E907J	97403	00561 00492
1 32U0E907U	97403	00446 00592
1 32U0E907J	97403	00817
1 32U0E907J-1	97403	00520
1 32U0E907J-2	97403	00483
1 32U0E907J	97403	00517
1 32U0E907J-1	97403	00591 00679
1 32U0E907J-2	97403	00554
1 32U0E907J-1	97403	00543 00677
1 32U0E907J-2	97403	00478
1 32U0E907J-3	97403	00544
1 32U0E907J-4	97403	00545
1 32U0E907J-5	97403	00546
1 32U0E907U-1	97403	00567 00694
1 32U0E907U-3	97403	00568

Reference No.	Mfg. Code	Index No.
1 32U0E9097	97403	00771
1 32U0E9098	97403	00457 00600
1 32U0E9099	97403	00503
1 32U0E9100	97403	00665
1 32U0E9101-1	97403	00651
1 32U0E9101-2	97403	00652
1 32U0E9102	97403	00666
1 32U0E9103-1	97403	00660
1 32U0E9103-2	97403	00510
1 32U0E9104	97403	00664
1 32U0E9105	97403	00547
1 32U0E9106	97403	00562 00634
1 32U0E9107	97403	00586
1 32U0E9108	97403	00588
1 32U0E9109	97403	00660
1 32U0E9110-1	97403	00667
1 32U0E9110-2	97403	00524
1 32U0E9111-1	97403	00510 00653
1 32U0E9111-2	97403	00511 00654
1 32U0E9112	97403	00672 00782
1 32U0E9114-1	97403	00421
1 32U0E9114-2	97403	00422
1 32U0E9115	97403	00599
1 32U0E9116-1	97403	00676
1 32U0E9116-2	97403	00562
1 32U0E9118	97403	00596
1 32U0E9119	97403	00449 00593
1 32U0E9120	97403	00430 00595
1 32U0E9121	97403	00597
1 32U0E9122	97403	00594
1 32U0E9123	97403	00586
1 32U0E9124-1	97403	00514 00657
1 32U0E9124-2	97403	00513 00658
1 32U0E9124-3	97403	00512 00659
1 32U0E9125-1	97403	00561
1 32U0E9125-2	97403	00675
1 32U0E9126	97403	00598
1 32U0E9130	97403	00530 00671
1 32U0E9131	97403	00426
1 32U0E9136	97403	00440
1 32U0E9139	97403	00537
1 32U0E9143	97403	00472
1 32U0E9144	97403	00474
1 32U0E9145	97403	00475
1 32U0E9146	97403	00447
1 32U0E9147	97403	00547
1 32U0E9148	97403	00552
1 32U0E9149	97403	00551
1 32U0E9150	97403	00548
1 32U0E9151	97403	00451
1 32U0E9152	97403	00455
1 32U0E9153	97403	00456
1 32U0E9154	97403	00452
1 32U0E9157	97403	00521
1 32U0E9158	97403	00519
1 32U0E9159	97403	00555
1 32U0E9160	97403	00564
1 32U0E9162	97403	00523
1 32U0E9163	97403	00522
1 32U0E9164	97403	00507
1 32U0E9165	97403	00438
1 32U0E9166	97403	00441
1 32U0E9167	97403	00529
1 32U0E9168	97403	00553 00338
1 32U0E9169	97403	00442
1 32U0E9170	97403	00429 00448 00461 00481 00495

Section VII. INDEX-FEDERAL STOCK NUMBER AND REFERENCE NUMBER CROSS-REFERENCE TO INDEX NUMBER

Reference No.	Mfg Code	Index No.
AAF164	28835	01132
AAW1958-9	28835	01140
AAW2198	28835	01134
AAW2704-1	28835	01102
AC93	76241	00003
AA1074	28835	01148
AA340-10	88044	01450
AA340-8	88044	01151
AA6039-28	85028	00190
AA9602-916	88044	00218
AA1134	28835	01178
AA1470	28835	01174
AA134	28835	01005
AA1083	28835	01191
AA2398	28835	01015
		01089
AA23-1	28835	01397
AA281	28835	01565
AA346	.8835	01504
AA347	28835	01069
AA334	28835	01440
AA335	28835	01477
AA342	28835	01067
AA368	28835	01467
AA451	28835	01066
AA467	28835	01069
AA938	28835	01219
AA960	28835	01061
AA971	28835	01067
AA991	28835	00203
		01569
AA575	28835	01135
AA579	28835	01075
AA594	28835	01028
AA626	28835	01067
	28835	01150
		01318
AA630	28835	01499
AA6314	28835	01160
AA634	28835	01161
AA6344	28835	01144
AA634A	28835	01146
AA634C	28835	01174
AA6A2	28835	01042
AA844	28835	01040
AA8A7A	28835	01193
		01160
AA883	28835	01244
AA848-8	28835	01078
AA898	28835	01155
		01182
AA719	2883	01041
AA7208	2883	01123
AA725-1	2883	01008
AA729	28835	01178
AA732	28835	01179
AA734	28835	01243
AA746	28835	01192
AA749	28835	01043
AA748	28835	01079
AA750	28835	01479
AA798	28835	01712
AA823	28835	01044
AA847	28835	01713
AA929	28835	01479
A1004	61208	00993
A1078	88315	00788
A108	61208	00966
A10A9M	44655	01043
A2012	61208	00958
		01019
A2018	61208	00959
		01032
A2221	61208	00969
A2349	61208	00943
A2331	61208	00971
A2340J	61208	00944
A2446	77260	00876
A2492	61208	00952
		00965
A25	28835	01173
		01432

Reference No.	Mfg Code	Index No.
A63	28835	01329
A6584	28835	01230
A2818	61208	00973
A2267	61208	00984
A2689G	61208	00994
A29	28835	01249
A2984	77260	00819
A3434	28835	01089
A3507J	61208	00931
A3535	61208	00987
A377W	61208	00974
A378W	61208	00990
A377J	61208	00986
A3774L	61208	00937
A3939	77260	00111
A43	24161	00013
A6264	77260	00045
A8404	77280	00078
A8626	77260	00068
A8V1	28835	01029
		01341
		01772
AC1304	92844	00236
		01033
AC139	92844	00239
AC72	92844	00236
AA23791	28835	01073
		01203
AA237.1-1	28835	01208
AA1AZ	28835	01343
		01769
AA219	28835	01099
AA334	28835	01141
AA487	28835	01099
AA487A	28835	01096
AA912	28835	01133
AA913	28835	01139
AA97	28835	01126
AZALA2	28835	00201
A170	28835	01388
		01645
AA3	81300	01197
AA4A	99730	01438
CA4A1	28835	01801
		03102
CA4A4	28835	01301
		01803
CA4A49	28835	01800
CA5A4	28835	01300
		01402
		01409
CC36A499	74868	00370
CC3T2483	74868	00371
CC3T3T49	74868	00369
CC3999252	74868	00368
CC92C939	74868	00367
CW1148	28835	01387
CW119U	28835	00246
		01590
		01737
CW1130	28835	01097
CW1139	28835	01107
CW1180	28835	01229
CW1183	28835	01233
CW1304	28835	01220
CW120	28835	01138
CW661	28835	01103
CW7B7	28835	01109
CW78U	28835	01110
CW811	28835	01340
CW80U	28835	01094
C31	28835	01250
C3844/3050-4	74855	00473
C500	28835	01740
C543	61208	00934
C66	28835	01507
		01725
DATA1301	28835	01130
DATA1312	28835	01128
DATA2215	28835	01501
DM61	04004	00424

Reference No.	Mfr Code	Index No.
UW1163	28835	01218
UW1347	28835	01388
		01789
UW1882	28835	01969
UW2083-1	28835	01141
UW3535M	28835	00174
UW3909	28835	00178
UW4004	28835	01981
UW4005	28835	01462
UW4015	28835	01980
UW4016	28835	01459
UW4020	28835	01291
		01722
UW4028	28835	01404
UW4453	28835	01406
UW4995	28835	00162
UW5017A	28835	00198
UW5018	28835	00198
UW5019	28835	00184
UW5027	28835	00170
		01013
UW5350	28835	00167
UW6028	28835	00199
UW6724	28835	01312
		01313
UW825	28835	01151
UW859	28835	01690
UW8904A	28835	01869
UU971-1	98255	00909
U2076	65925	02193
uC10	01074	01306
uC6	01074	01304
uC8	01075	03105
uMC500-300	77111	01222
u9029-1	58923	00266
u9029-9	58923	00983
Vm1406	28835	00166
Vm1407	28835	00169
Vm1408A	28835	00169
Vm1409	28835	00173
Vm1241M	28835	00175
Vm3399	28835	01310
V911-3	99856	00901
vC3962	77260	00030
v100	74063	01342
		01942
v10923	77260	00070
v11314-11	77260	00041
v11499-1	77260	00036
v12211	77260	00098
v12758-1	77260	00046
v13416	77260	00075
v13417	77260	00074
v14407	77260	00033
v14431	77260	00069
v3108	77260	00021
v3403	77260	00023
v4070-3	77260	00034
v5796	77260	00119
v6025	77260	00029
v6800	77260	00035
v9042-126	77260	01044
v9149-1	77260	00022
v9549	77260	00024
v9594	77260	00047
v9597	77260	00037
v9847	77260	00081
v9838	77260	00077
vW9	06004	00423
J1448	28835	01159
J346	28835	01149
J347	28835	01147
J348	28835	01157
J3928	28835	01154
J395	28835	01145
J3976	28835	01144
J569	28835	01150
J598	28835	01164
J756	28835	01148
LPC 2832	63477	00231
M42000	77260	00018
MS19001-1	96906	00283

Reference No.	Mfr Code	Index No.
MS19001-3	96906	00978
MS19001-4	96906	00953
MS19003-1	96906	00975
MS197V5-218	96906	00326
MS197V5-306	96906	00149
		01401
		01405
		01518
MS197V5-310	96906	00010
		01403
MS197V5-311	96906	01400
		01643
		01647
MS197V5-315	96906	00249
MS197V5-606	96906	00178
		01404
		01517
MS197V5-805	96906	01402
MS197V5-816	96906	01407
		01520
MS197V5-818	96906	01399
		01405
MS197V5-819	96906	01404
MS197V5-823	96906	01085
MS197V5-907	96906	01648
		01699
		01762
MS197V5-914	96906	01408
		01519
MS19533-198	96906	00908
MS19562-35	96906	00970
MS20425-1315	96906	00985
MS20425-200	96906	00209
MS19000-7	96906	00279
MS20007-171	96906	00982
MS20007-250	96906	01008
		01701
MS20008-144	96906	00882
MS20008-146	96906	00881
MS20008-200	96906	00981
MS20246AD4-9	96906	00797
MS20392-5C27	96906	00338
		00340
MS20392-7C37	96906	00339
MS20426AD3-3	96906	00798
MS20426AD3-5	96906	00534
		00856
MS20426AD4-5	96906	00796
MS20426AD4-6	96906	00895
MS20426AD6-10	96906	00674
MS20426AD6-7	96906	00796
		00799
		00856
MS20470AD4-4	96906	00476
MS20470AD4-5	96906	01216
MS20470AD4-7	96906	00532
MS20470AD6-10	96906	00907
MS20470AD6-7	96906	00468
		00486
		00502
		00533
		00535
		00536
		00550
		00610
		00629
		00639
		00757
		00783
		00787
		00788
		00789
		00790
		00791
		00795
		00800
		00857
MS20470AD4-9	96906	00849
MS20470AD8-14	88044	00879
	96906	00792
		00793
MS20470AD8-18	96906	00801

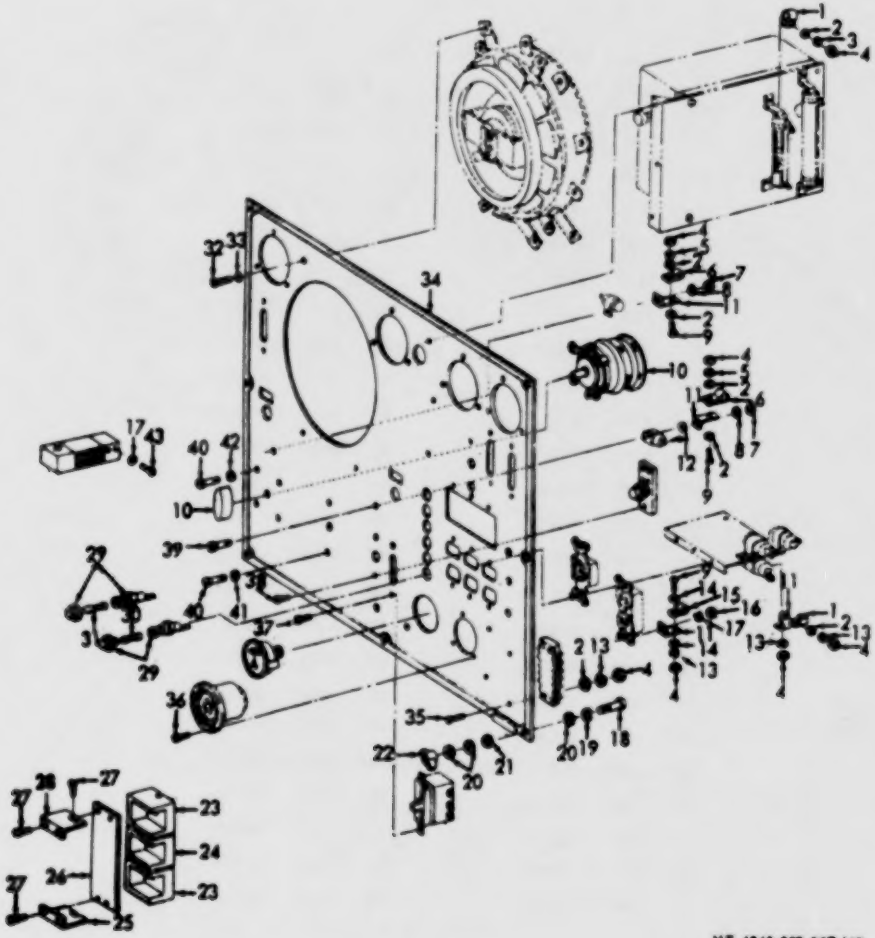

Figure No. 45 Control Panel

Section VII. INDEX-FEDERAL STOCK NUMBER AND REFERENCE NUMBER CROSS-REFERENCE TO INDEX NUMBER

Reference No.	Mfr Code	Index No.
1320EV170	97403	00804
		00816
		00832
1320EV171	97403	00877
		00936
1320EV172	97403	00937
1320EV173	97403	00427
1320EV174	97403	00808
1320EV177	97403	00717
1320EV178	97403	00718
		00879
1320EV179	97403	00873
1320EV180	97403	00871
1320EV181	97403	00874
1320EV182	97403	00872
1320EV182-1	97403	00881
1320EV183	97403	00723
1320EV186	97403	00721
1320EV187	97403	00722
1320EV188	97403	00725
1320EV189-1	97403	00719
1320EV189-2	97403	00720
1320EV190	97403	00724
1320EV191	97403	00728
1320EV192	97403	00727
1320EV193	97403	00730
1320EV194	97403	00731
1320EV195	97403	00726
1320EV196	97403	00734
1320EV197	97403	00759
1320EV198	97403	00758
		00763
1320EV201	97403	00755
1320EV202	97403	00760
1320EV203	97403	00762
1320EV204	97403	00761
1320EV205	97403	00764
1320EV206	97403	00767
1320EV207	97403	00768
1320EV208-1	97403	00769
1320EV208-2	97403	00770
1320EV210	97403	00821
1320EV211	97403	00831
1320EV214	97403	00832
1320EV217	97403	00829
1320EV221	97403	00825
1320EV223	97403	00839
1320EV226	97403	00830
1320EV227	97403	00835
1320EV228-1	97403	00790
1320EV228-2	97403	00899
1320EV229	97403	00711
1320EV231	97403	00712
1320EV232	97403	00710
1320EV233	97403	00716
1320EV236	97403	00757
1320EV237	97403	00739
1320EV240	97403	00741
1320EV241	97403	00736
1320EV242	97403	00772
		00775
1320EV246	97403	00778
1320EV247	97403	00808
1320EV248	97403	00807
1320EV249	97403	00804
1320EV250	97403	00809
1320EV251	97403	00773
1320EV253	97403	00840
1320EV254	97403	00818
1320EV900	97403	00777
1320EV711	97403	00916
1320EV899-1	97403	01273
1350	61308	00934
		01016
		01037
137200	00000	01317
138031	00000	00084
14024	72968	00701
142807	00000	00322
		01084
148280	00000	00310
1600140A	28835	01014

Reference No.	Mfr Code	Index No.
1600140A	28835	01322
1601	70270	00306
166399	00000	00713
		00714
		00836
166403	00000	00467
		00469
		00503
		00612
		00626
		00640
169994	00000	01376
		01391
17-100114-11	94222	00632
		00865
		00899
17-100115-14	94222	00752
		00753
		00893
17-11-206-11	94222	00896
17-11-206-12	94222	00611
		00612
1863	79590	00227
187123	00000	00093
		00094
1909	57733	00204
19872	61208	00938
2003	24835	01140
2035	30443	00201
20932	30443	00200
21-2-46	60315	00131
		01720
220R42	92866	00237
2255	97086	00126
22693	16004	00207
22694	16004	00292
22695	16004	00282
22720	16004	00293
22768	16004	00307
22770	16004	00289
23128	16004	00296
2323	61257	00130
2340	77060	01536
23778	16004	00996
2424	61208	00972
25M5130	28835	01342
25M5130A	28835	01587
25M5629	28835	01627
25M567	28835	01359
2761	75542	00780
2965	61208	00969
383K5062-13	57711	00888
383K5062-14	57711	00889
383K5062-5	57711	00890
383K5062-96	57711	00887
30PA-AAUG	02305	01328
30PS	02305	0131'
3029	71002	01269
30460	16004	00991
30469	16004	00993
30490	16004	00992
30491	16004	00988
30492	16004	00990
30493	16004	00979
30519	16004	00932
307322	30443	00934
314010	79915	01313
		01331
314030	79915	01314
		01332
31911	16004	00342
31919	16004	01028
318	98730	01224
31920	16004	00994
320331	43334	00020
		00031
321	98730	00221
33399	16004	01070
		01206
33309	16004	00235
33376	16004	01221
33378	16004	01215

Reference No.	Mfg Code	Index No.
53579	16004	01217
53691	16004	00866
53692	16004	00867
53959	16004	00364
53960	16004	00927
53962	16004	00963
		01029
53963	16004	00918
53965	16004	00914
53971	16004	00125
53972	16004	01018
		01340
53994	16004	01032
53995	16004	01031
53998	16004	00140
54200	16004	00124
54200-1	75915	01533
54461	16004	00129
		01724
55489	28035	01114
48-208-06-13	96222	00760
4W871	28035	01120
62C14495	00000	00828
62001	59153	13197
6209994	00000	01391
626903	00000	01225
6439	81209	00941
651079	24617	00999
651617	24617	01332
654154	00000	01303
6846	28035	01398
9CW1894	28035	01112
9CW2079	28035	01115
		01396
9CW3228	28035	01515
9CW3403	28035	01253
9CW3604	28035	01108
9CW4000	28035	01106
9CW5083	28035	01444
9CW7176	28035	01469
9CW7179	28035	01477
9CW7184	28035	01478
9CW7185	28035	01491
		01303
9GR1130	28035	01478
9GR1148	28035	01308
9GR162	28035	01431
9GR1231A	28035	01364
9GR1261	28035	01439
9GR1262	28035	01465
9GR1269	28035	01350
9GR1276	28035	01467
9GR1280	28035	01560
9GR1310	28035	01303
9GR1326	28035	01190
9GR1331A	28035	01304
9GR1392A	28035	01021
9GR1392A1	28035	01022
9GR1431	28035	01028
9GR1435	28035	01406
9GR1436	28035	01367
9GR1440	28035	01366
9GR1440A	28035	01429
9GR1464	28035	01420
9GR1472	28035	01307
9GR1496	28035	01432
9GR1500	28035	00197
9GR1704	28035	01423
9GR1722	28035	01424
9010	79562	00741
903-2	76854	00947
908799	97297	00960
9062C99	00000	01349
9062110	00000	01008
9107-137	80482	00780
91608	78992	00361
		00391
9161010	78992	00363
9161011	78992	00364
9161P	78992	00377
91629	78992	00380
		00390

Reference No.	Mfg Code	Index No.
91623-1	78992	00379
		00389
9164010	78992	00388
916404	78992	00997
9241	79582	00779
9262	71183	01309
		01493
93603-1	78992	00373
		00387
93604	78992	00382
		00392
93616	78992	00374
		00388
936161	78992	00375
972424	00000	00256
		00261
973000	00000	00214
973003	00000	00254
		00262
973007	00000	00257
		00263
973010	00000	00259
9481147	00000	00777
992627	00000	00486
992838	00000	00489
992839	00000	00487
992840	00000	00490
992864	00000	00820
9989B3U	78992	00364
6Pw2490-3	28035	01105
6Pw2490-5	28035	01104
6Pw3880	28035	01064
6453333-23	09690	*0179
61-1W-2-6	94222	00434
6304	79061	01436
6402	79061	01437
661	81603	00420
6700	79061	04139
6939	61209	00977
70	28035	01662
70500898	19207	01086
73212V9	00000	01056
7351202	00000	01067
73555V3	00000	00240
7367229	00000	00247
7523	70903	04139
7539477	19207	01330
		01501
7536477		01569
7582	19207	01729
	76545	01311
		01493
77Z8882	00000	01049
77A2042	00000	00260
798277-B	00000	00259
888-1229	28035	01072
88W104	28035	01178
88W1149-9	28035	01111
88W1257	28035	01236
88W1258	28035	01237
88W1261	28035	01118
88W1261	28035	01338
88W1262	28035	01240
88W1263	28035	01299
		01939
88W1291	28035	01055
88W1295	28035	01398
88W1444	28035	01312
88W1917	28035	01316
		01496
88W1918	28035	01496
88W1919	28035	01497
88W1940	28035	01298
		01474
88W1942	28035	01297
88W1944	28035	01495
88W1945	28035	01298
88W1971	28035	01031
88W1972	28035	01236
88W1975	28035	01339
88W1984	28035	01066
88W240	28035	01129

Section VII. INDEX-FEDERAL STOCK NUMBER AND REFERENCE NUMBER CROSS-REFERENCE TO INDEX NUMBER

[illegible]	[illegible]	[illegible]
00W242	28035	01128
00W244	28035	01238
00W246	28035	01130
00W264	28035	01135
00W274-17	28035	01101
00W348	28035	01142
00W406	28035	01044
		01209
00W728	28035	01119
00W729	28035	01093
00W730	28035	01231
00W732	28035	01232
00W733	28035	01113
00W743	28035	01226
00W744	28035	01252
00W747	28035	01317
00W753	28035	01393
		01707
00W753A	28035	01708
00W757	28035	01264
00W771	28035	01369
00W797	28035	01194
00W800	28035	01131
00W801	28035	01132
00W806	28035	01741
00W809	28035	00143
		01738
00W811	28035	01739
00W816	28035	01391
		01553
00W817	28035	01626
00W819	28053	01556
00W824	28035	01467
00W828	28035	01296
		01800
00W838	28035	01365
00W839	28035	01363
00W840	28035	01362
00W869	28035	01227
00W897	28035	01134
00634	04009	01394
		01714
0136960	00000	01623
0137479	00000	01644
0137484	00000	01834
0161877	00000	00091
		00092
02818	04009	01711
0328423	00000	00655
		00656
		00774
035	79550	00223
		01270
0354	79550	00224
04	35044	04288
052850	00000	01007
077	79550	00222
9	44655	00126
		01723
9375	16004	00983
9507	43334	00933

Section VII. INDEX-FEDERAL STOCK NUMBER AND REFERENCE NUMBER CROSS-REFERENCE TO INDEX NUMBER

Stock Number	Index Number
5305-016-4403	00812
	00828
	00840
5305-016-9554	01378
	01551
5305-018-0135	00320
5305-018-1317	00205
5305-018-1667	00298
5305-042-0994	01391
	01395
5305-043-0683	00860
5305-043-0747	00177
5305-044-1395	00946
5305-044-4153	01344
5305-044-5503	00345
5305-050-1077	00805
5305-052-0913	01188
5305-052-0920	00814
	01387
	01376
	01380
	01547
	01548
	01783
5305-052-0921	00815
5305-056-6850	01808
5305-057-9017	00813
	01040
5305-067-9898	01035
	01043
5305-068-0498	01183
5305-068-0500	01660
	01803
5305-068-0501	01347
	01348
	01381
	01383
	01344
	01789
5305-068-0502	00144
	00210
	00402
	00809
	01775
5305-068-0504	00289
	00408
5305-068-0505	01373
	01038
	01494
5305-069-0495	01180
5305-071-1769	01080
5305-071-1778	01081
5305-071-2238	01399
5305-071-2239	00171
5305-071-2241	00211
	01348
5305-150-2937	01498
5305-208-6190	01482
5305-223-3839	00803
	01801
5305-223-3840	01184
	01802
	13157
5305-223-8497	01030
5305-226-7766	01002
5305-249-0911	00885
5305-253-0618	01892
5305-267-8974	00104
5305-267-8979	01003
5305-269-2801	00290
	00291
5305-269-2805	00085
	00086
	00245
	00348
5305-269-2807	00349
5305-269-2808	01042
5305-269-3208	01434
	01691
5305-269-3209	01433
5305-269-3210	00470
	00409
5305-269-3211	00812
5305-269-3213	00840
5305-269-3218	01378
5305-269-4511	01551
5305-275-9310	00320
5305-276-0000	00205
5305-278-0394	00298
5305-279-4514	01391
5305-281-4920	01395
5305-281-6388	00860
5305-288-1927	00177
5305-290-2582	00946
5305-290-2597	01344
5305-297-8093	00345
5305-441-0238	00805
5305-479-9233	01188
5305-584-7810	00814
5305-637-1128	01387
5305-638-0343	01376
5305-639-6376	01380
5305-639-8110	01547
5305-651-2887	01548
5305-669-4629	01783
5305-682-3459	00815
5305-710-4191	01808
5305-723-9387	00813
5305-726-6798	01040
5305-726-8810	01035
5305-729-3527	01043
5305-729-4133	01183
5305-729-4138	01660
5305-729-4183	01803
5305-727-9877	01347
5305-781-4227	01348
5305-781-3924	01381
5305-782-9496	01383
5305-782-9493	01344
	01789
5305-824-4787	00144
5305-828-9821	00210
	00402
5305-830-8476	00809
5305-840-5938	01775
	00289
5305-854-9351	00408
5305-855-0980	01373
	01038
5305-855-0981	01494
5305-855-0985	01180
5305-855-0986	01080
	01081
5305-855-0974	01399
5305-855-1443	00171
	00211
5305-879-3823	01348
	01498
	01482
	00803
	01801
	01184
	01802
	13157
	01030
	01002
	00885
	01892
	00104
	01003
	00290
	00291
	00085
	00086
	00245
5305-879-7042	00348
5305-883-0627	00349
5305-883-0628	01042
5305-883-0633	01434
5305-888-2879	01691
	01433
5305-889-3001	00470
5305-957-2358	00409

Index Number	Stock Number	Index Number
00804	5305-957-2356	01552
01823	5305-958-3048	01432
00884	5305-958-3050	01389
00137	5305-965-7806	01618
00925	5305-984-4978	01709
01125	5305-984-4982	01352
01163		01483
01239	5305-984-4983	01607
01752	5305-984-4992	01382
00067		01365
01116		01510
01242	5305-984-6184	01612
00962		01760
00627	5305-984-6191	01291
00061		01785
01358		01821
01363	5305-984-6193	01355
01511		01356
01898		01357
01808		01507
01810		01508
01778		01606
00898		01760
01467		01826
00083	5305-984-6194	00108
00084	5305-984-6195	01394
00200	5305-984-6208	00808
01360		01696
01346	5305-984-6210	01758
01897		01827
00305	5305-984-6212	01353
00006		01824
00082		01825
00200		01928
00321	5305-984-6214	00538
00347		01488
01886		01509
01771		01815
01489	5305-984-6216	01811
00981	5305-984-6224	01837
01078	5305-984-8248	00208
01079		01754
00408		01781
00407	5305-988-1170	01593
00405		01567
01345		01609
01480	5305-988-1171	01259
00859		01695
01481	5305-988-1721	01051
00369		01165
01370		01345
01549		01636
00540		01693
01036	5305-988-1723	01278
01349		01777
01773	5305-988-1724	01359
01368	5305-988-1725	01756
00539		01781
01029	5305-988-1726	01613
01550		01614
00816	5305-988-1727	01605
00172	5305-988-1731	01742
01038	5305-988-1752	01364
01039		01783
01193	5305-988-9265	01616
01044	5305-989-6265	01261
01071	5305-989-7434	01260
00926		01710
01041	5305-989-7435	01057
01042	5306-993-1849	01684
01371	5305-996-1851	00146
01372	5306-012-8640	00419
01377	5306-017-4484	01995
01849	5306-034-8010	00827
01366	5306-057-2504	00828
01617	5306-057-2507	00829
01619	5306-225-8492	00121
01011	5306-225-8494	00937
00811		01903
00812	5306-225-8497	01210
01635		01211
01379	5306-229-8502	00936

Stock Number	Index Number	Stock Number	Index Number	Stock Number	Index Number
5310-665-1429	00751	5310-889-4524	01253	5320-992-3266	00487
5310-690-2710	01042		01700		00624
5310-721-3682	01085	5310-890-4524	01844		00784
5310-732-5998	01402	5310-965-8451	00188		00788
5310-732-0350	00748		00194	5320-890- Thru	00789
	01488		01731	5320-668-1261	00874
	01533	5310-984-8818	01041	5320-730-8032	01216
	01504	5310-994-5568	00048	5320-734-0992	00533
	01674	5315-014-2489	00026		00535
	01818	5315-042-3683	00042		00536
5310-734-0359	00829	5315-042-3698	01088		00550
	00914		01801	5320-959-1316	00908
5310-734-0360	00741	5315-050-5909	00288	5325-262-9944	00181
	00330	5315-050-5754	00980	5325-281-1957	00736
5310-732-0846	01076	5315-061-7033	00336		01727
	00102		00390	5325-358-9277	00262
	00114	5315-081-7042	00339	5325-720-9054	00234
	00268	5315-240-1008	00054		00509
	00402	5315-298-1481	00317	5330-097-2670	00058
5310-734-0888	00404		00984	5330-302-1388	01173
5310-732-9984	01443	5315-298-1499	00883		01432
5310-761-0882	00136	5315-423-3924	00852		01524
	00137		01017	5330-392-4061	00733
	00160	5315-423-8038	00954		00735
	00743		01016		01898
	00745	5315-568-7804	00989	5330-250-6184	00042
	00746	5315-781-4008	00881	5330-285-9441	00028
	00749	5315-781-2017	00981	5330-447-4102	01708
	00750	5315-814-3930	00970	5330-984-2109	01244
	00833	5315-815-8840	00922	5330-991-2796	00065
	01050	5315-816-1796	00333	5340-098-5584	00655
	01289	5315-839-5820	00431		00656
	01296		00574		00776
	01828	5315-839-5822	00339	5340-288-6178	00232
	01583		00336	5340-247-4852	00819
	01742		00834	5340-256-6868	00306
	01733		00921	5340-282-9082	00289
5310-765-0905	00331	5315-842-3044	00834	5340-285-7705	00254
	00403		00837	5340-285-7731	01306
	01074		00740	5340-429-0989	01388
5310-765-0921	01075	5315-842-3194	00818		01789
5310-768-0318	00883	5315-870-1880	00882	5340-496-3022	00944
5310-768-0319	00998	5315-948-9791	00985	5340-505-6393	00688
	01325	5320-058-0462	00907	5340-586-1911	00890
	01981	5320-117-5922	01077	5340-593-3292	00127
5310-777-0222	00248	5320-117-6582	00757	5340-597-4781	00984
5310-807-1468	00090		00787	5340-598-0934	00839
5310-809-3078	00215		00788	5340-598-2223	00840
	01457		00789	5340-598-6232	00949
	01783		00790	5340-613-2987	00689
5310-809-4481	00742		00791	5340-616-4156	00897
5310-809-5997	00928		00795	5340-633-7336	00887
5310-809-5998	00442		00800	5340-680-4402	01304
	00662	5320-117-6790	00792	5340-680-5783	00071
	01884		00793	5340-735-1167	00378
5310-809-8533	01488		00875		00388
5310-809-8536	00913	5320-117-6826	00476	5340-797-1879	00375
5310-809-8544	00369	5320-117-6829	00532	5340-886-7226	00128
	01833	5320-117-6852	00468	5340-965-0823	00305
5310-809-8546	00130		00489		00917
	00151		00502	5355-429-0935	01675
	00244		00818	5355-447-4201	01888
	01496		00825	5355-447-6893	00312
	01470		00839		00903
	01916		00783	5355-712-1384	01891
5310-823-8803	00250		00857	5510-238-0489	00823
	00411	5320-117-6854	00449		01938
5310-849-7733	01005	5320-117-6858	00777	5530-189-8173	00898
	01480	5320-117-6937	00798		01887
	01843	5320-117-6939	00934	5905-889-9979	01678
	01847		00856	5905-180-4789	00142
5310-877-5799	00920	5320-117-6950	00794		01734
5310-877-6797	00103		00797	5905-279-5723	00204
	00110	5320-117-6951	00895		01990
	00113	5320-117-7287	00796		01737
	01094		00799	5905-293-9560	01588
5310-880-7745	00316		00858		01734
	00332	5320-242-0314	00801	5905-358-0575	00126
5310-880-7746	00376	5320-286-4789	00467		01723
5310-888-2078	00792		00501	5905-374-3042	01687
	00793		00611	5905-447-4196	01677
	00893		00638	5905-447-4388	01770

Stock Number	Index Number
5905-052-3234	00203
	01369
	01735
5905-716-5912	01776
5905-716-4932	01753
5905-746-7638	01754
5905-845-9272	01343
	01769
5905-846-2222	00143
	01738
5905-971-5004	01663
5910-504-7618	01601
5910-504-7614	03102
5910-561-6867	01300
	01602
	01605
5910-669-3913	01301
	01603
	01606
	04208
5920-280-5002	01313
	01531
5920-539-6920	01314
	01532
5920-892-9311	01162
	01533
5930-263-2369	01395
	01711
	01715
5930-272-1382	01396
	01712
	01714
5930-343-0507	01662
5930-350-7768	01563
5930-371-5498	01564
5930-374-5039	01665
5930-374-5041	01661
5930-395-6619	01308
5930-447-9251	01669
5930-734-5208	00239
5930-735-6144	00201
5930-740-0011	01392
	01658
5930-751-6974	01393
	01707
5930-831-3979	01657
5935-027-9425	01311
	01493
5935-258-9600	01663
5935-258-9663	01310
5935-258-9136	01049
5935-283-2054	00163
5935-295-6903	01056
5935-300-9909	00255
5935-768-7042	00257
	00263
5935-776-2642	00260
5935-860-0304	01562
5935-865-5287	01309
	0149?
5940-050-6209	0153?
5940-050-6210	01606
5940-057-2929	00256
	00261
5940-155-9693	00190
5940-197-9762	01671
5940-206-7618	01438
5940-331-3081	00176
5940-501-6369	01044
5940-538-0991	00225
5940-538-1028	01743
	01766
5940-542-9966	01271
5940-557-2343	00226
5940-633-5519	00214
5940-636-7119	00183
	00186
	00189
5940-681-9713	01277
	01569
	01572
	01575

Stock Number	Index Number
5940-681-9713	01578
5940-812-5166	01052
5945-429-0929	01664
5945-851-6640	01342
	01542
5945-802-6456	01632
5950-404-9673	01598
5970-204-6410	01266
	01655
5970-308-2614	01676
5970-374-5128	01157
5970-429-0954	01107
5970-429-0955	01233
5970-447-4194	01669
5970-669-9618	01518
	01649
5970-698-7186	01123
5970-698-7191	01470
5970-699-9616	01156
5970-763-7605	01108
5970-765-1752	01102
5970-765-1753	01100
5975-152-1066	00221
5975-284-9303	00192
5975-296-6661	00180
5975-319-4176	01110
5975-447-4283	01303
	01476
5975-510-3159	01225
5975-563-1924	01604
	01612
5975-566-5661	01226
5977-038-3118	01178
5977-240-0381	01152
5977-252-8858	01144
5977-257-6055	01159
5977-284-7663	01146
5977-285-0953	01145
5977-319-0392	01179
5977-361-7764	01151
5977-374-5063	01160
5977-376-5132	01154
5977-429-0936	01155
	01162
5977-429-0960	01507
	01725
5977-447-4202	01153
	01166
5977-498-5178	01161
5977-598-9051	01165
5977-655-2555	01176
5977-664-6992	01167
5977-735-6143	01174
5977-757-1691	01175
5999-450-7905	01129
6105-356-2365	01114
6110-325-5147	01557
6115-025-3696	01025
	01361
	01772
6115-258-3629	01095
6115-293-5762	01192
6115-356-2313	01126
6115-356-2350	01167
6115-361-7627	01099
6115-371-5672	01122
6115-376-5094	01580
6115-376-5127	01194
6115-376-5147	01190
6115-825-6778	01565
6115-887-8043	01257
6145-164-7026	01664
	01660
6145-164-7027	01613
	01661
6145-164-7031	01662
	01667
6145-192-3266	01570
	01574
	01672
	01663

Stock Number	Index Number
6145-192-3316	01466
	01664
6145-284-0326	00229
	01744
	01767
	01665
6145-299-6630	00226
	01659
6145-660-6937	00186
	00187
	00191
	01540
	01666
6145-669-6781	01573
	01576
	01667
6625-252-5565	02143
6625-266-6023	01319
6625-272-9665	01367
6625-642-0646	01242
6625-642-0696	01347
6645-736-0162	01321
	01667
6660-645-0606	01346
9320-631-6106	00754
9515-267-1119	00846
	01654
9530-276-0702	00910
	01652
9535-233-1060	00836
	01653
9905-205-2765	01010
9905-807-3712	01020

By Order of the Secretary of the Army:

W. C. WESTMORELAND,
General, United States Army,
Chief of Staff.

Official:

KENNETH G. WICKHAM,
Major General, United States Army,
The Adjutant General.

Distribution:

To be distributed in accordance with DA Form 12-25, Section I (qty rqr block no. 368) organizational maintenance requirements for Shop Equipment Sets, Set 3, Contact Maintenance.

* U.S. GOVERNMENT PRINTING OFFICE : 1990 0 - 261-872 (21196)

PIN : 005072-000